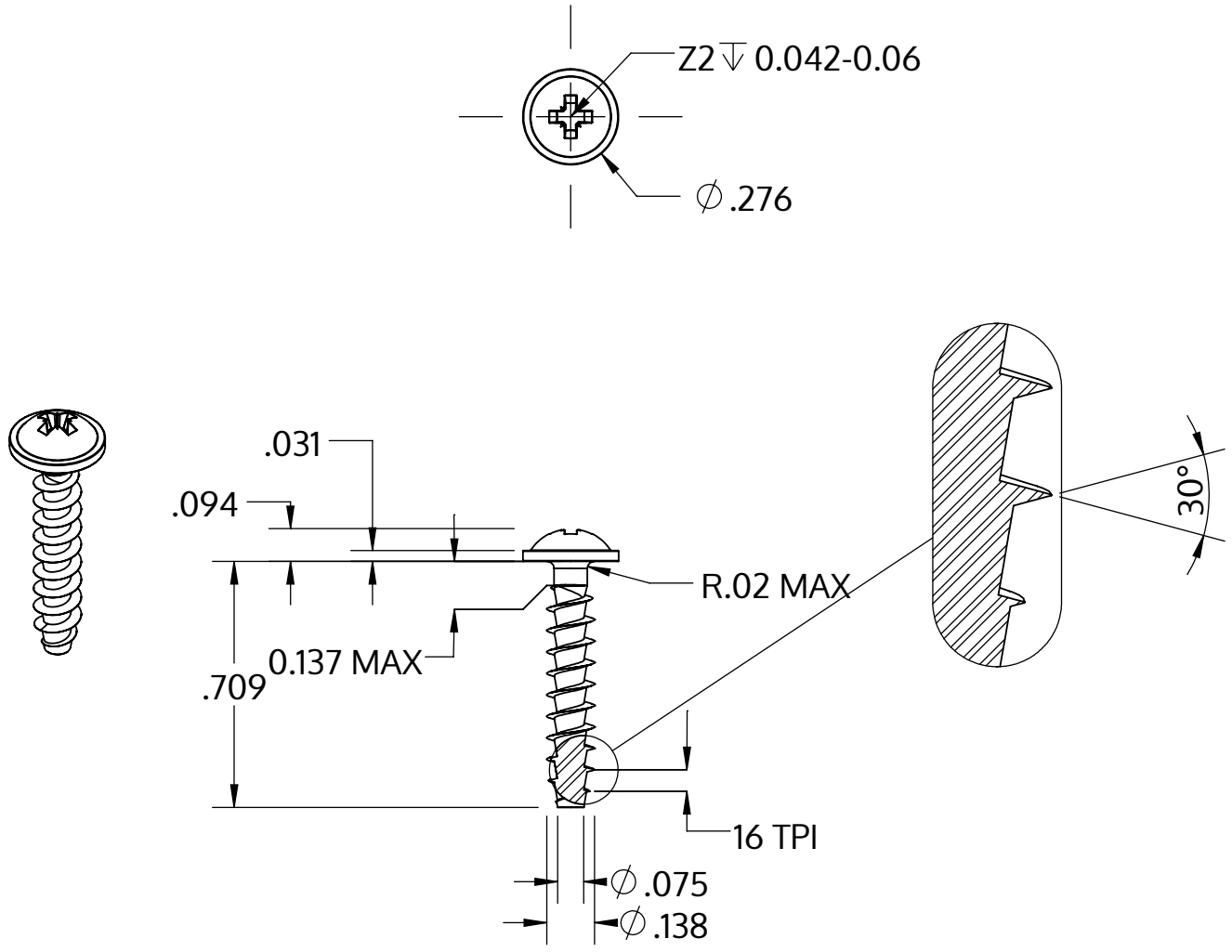


| | |
|---|---|
| Metric size | M3.5 x 1.57 mm |
| US size (converted) | #6-16 |
| | Tolerances [inch] |
| Length | +/- 0.021 |
| Head diameter | +0 / -0.022 |
| Head height | +/- 0.004 |
| Thread diameter | +0.007 / -0 |

| | |
|---|---|
| Beschrijving | STP21A 3.5x18.0 - Z2 |
| Materiaal | veredeld staal |
| Oppervlak | verzinkt 5-7 µm, getempert, blauw / transparant gepassiveerd |
| Gewicht | 1.026 kg / 1000 stuk |

| | | |
|---|---|---|
| SCREWERK | **STP21A0350180S** | |
| _Zoll Zeichnung Größe A | Schaal 2:1 | 2024-10 |