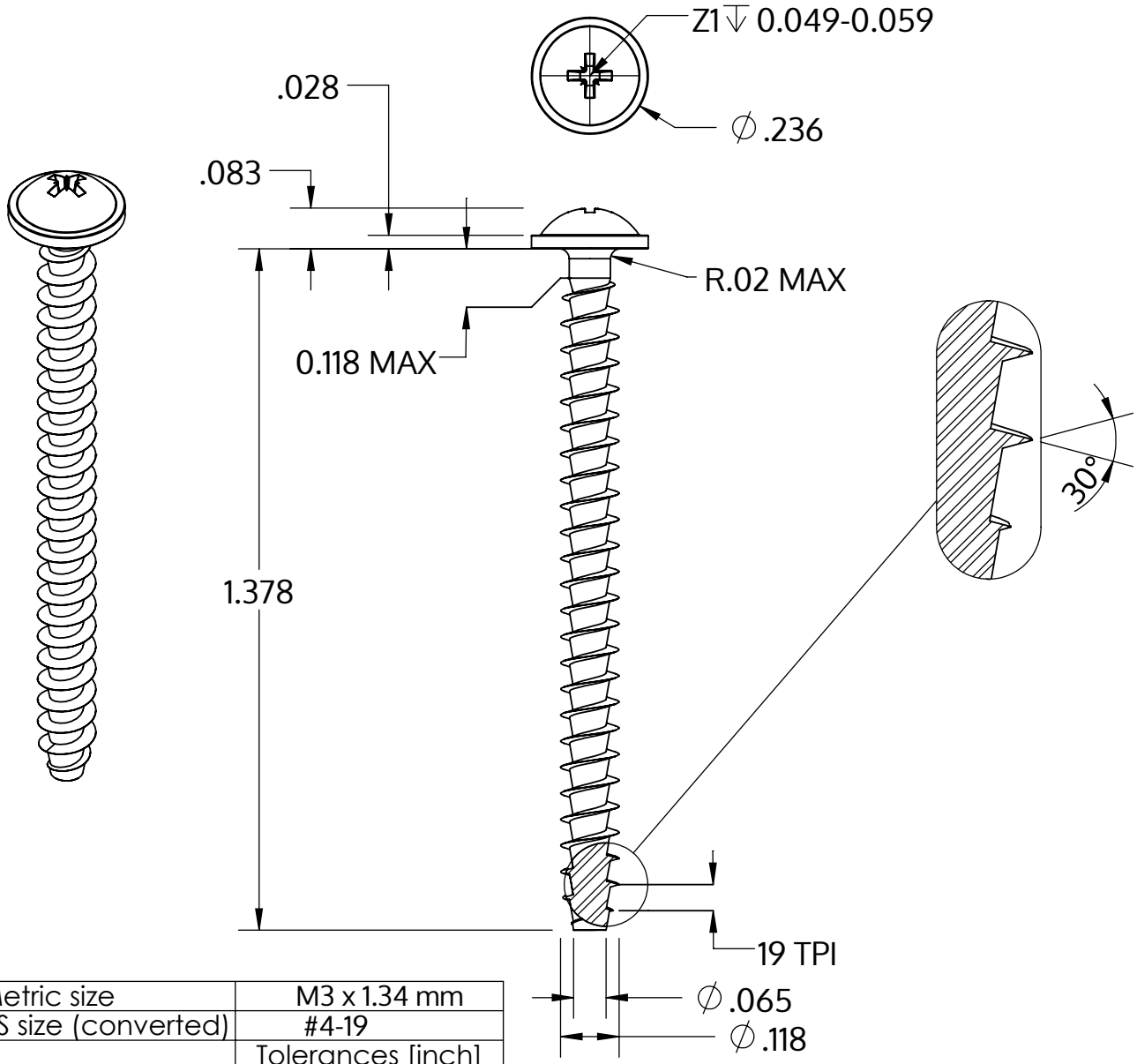


| | |
|---|---|
| Metric size | M3 x 1.34 mm |
| US size (converted) | #4-19 |
| | Tolerances [inch] |
| Length | +/- 0.031 |
| Head diameter | +0 / -0.018 |
| Head height | +/- 0.004 |
| Thread diameter | +0.005 / -0 |

| | |
|---|---|
| Beskrivning | STP21A 3.0x35.0 - Z1 |
| Material | stål, härdat |
| Yta | förzinkad 5-7 µm, härdad, blå/transparent passiviserad |
| Vikt | 1.230 kg / 1000 styck |

| | | |
|---|---|---|
| SCREWERK | **STP21A0300350S** | |
| _Zoll Zeichnung Größe A | Skala 3:1 | 2024-10 |