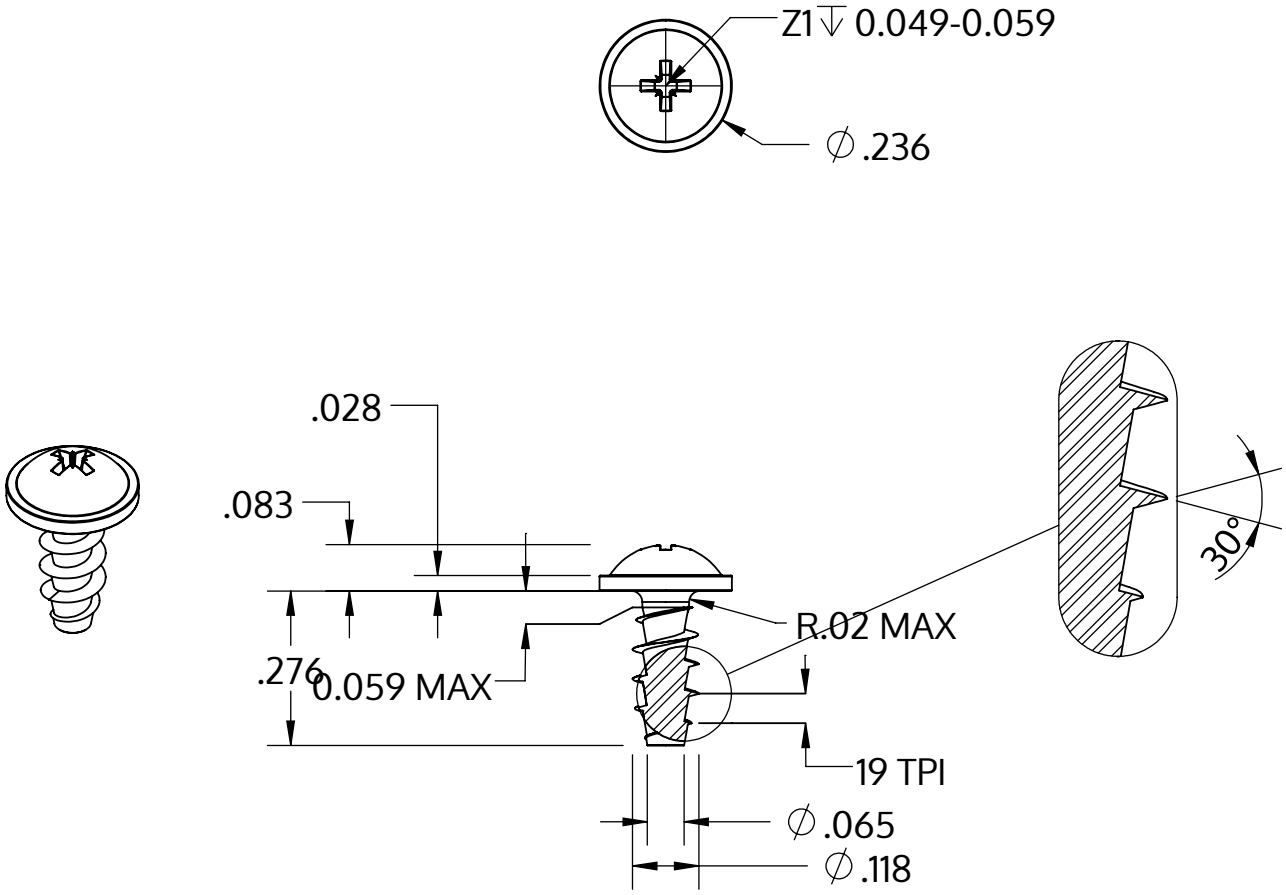

Metric size	M3 x 1.34 mm
US size (converted)	#4-19
	Tolerances [inch]
Length	+/- 0.017
Head diameter	+0 / -0.018
Head height	+/- 0.004
Thread diameter	+0.005 / -0

Description	STP21A 3.0x7.0 - Z1
Matière	acier inoxydable A2
Surface	brillant décapé et passivé
Poids	0.427 kg / 1000 Unité

SCREWERK	**STP21A0300070E**	
_Zoll Zeichnung Größe A	Redimensionner 3:1	2024-10