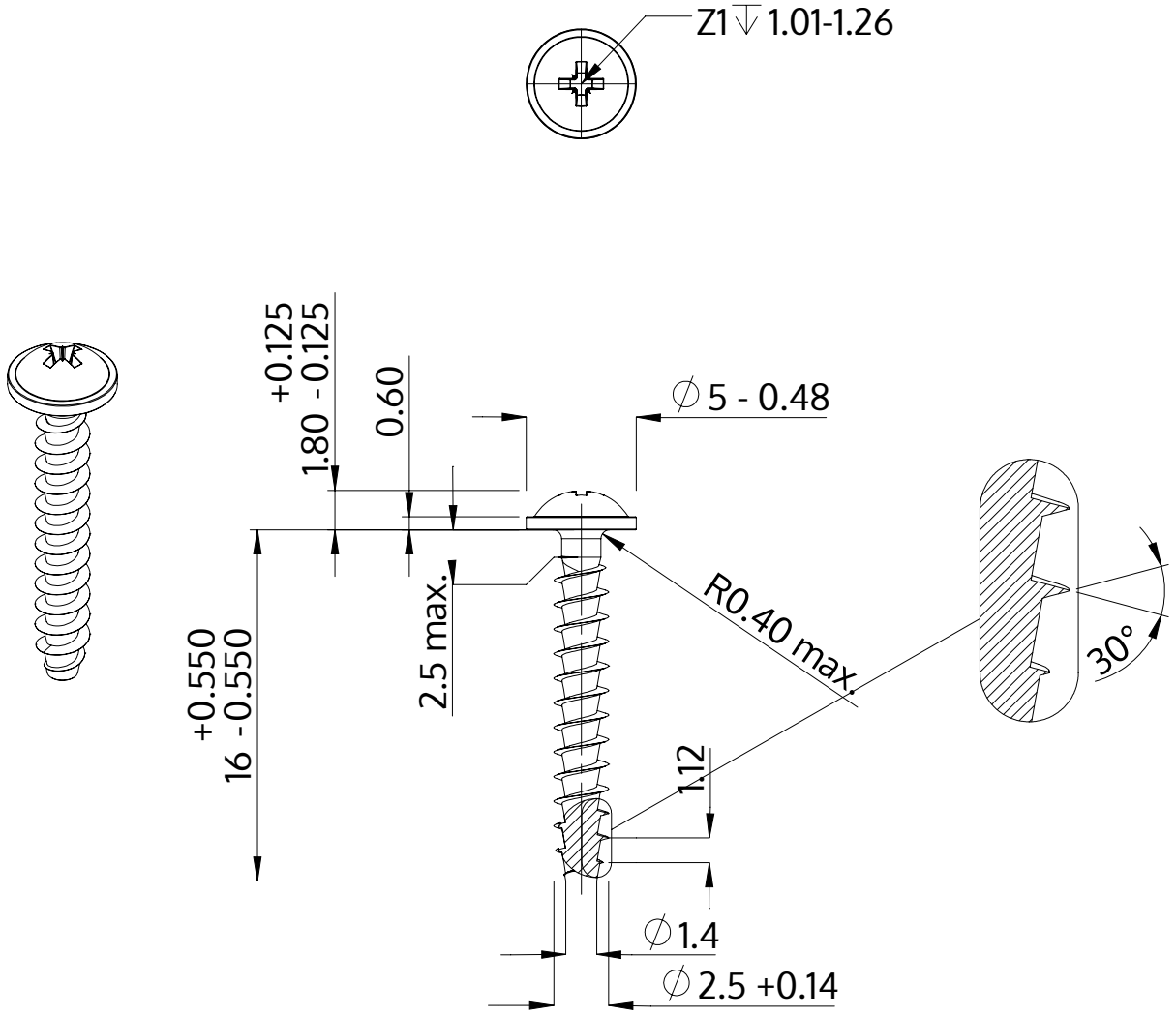

Description	STP21A 2.5x16.0 - Z1
Material	steel, hardened
Surface	zinc-plated 5-7 µm, baked, blue / transparent passivated
Weight	0.473 kg / 1000 pieces

SCREWERK	**STP21A0250160S**	
Metric Drawing A4	Scale 3:1	2024-10