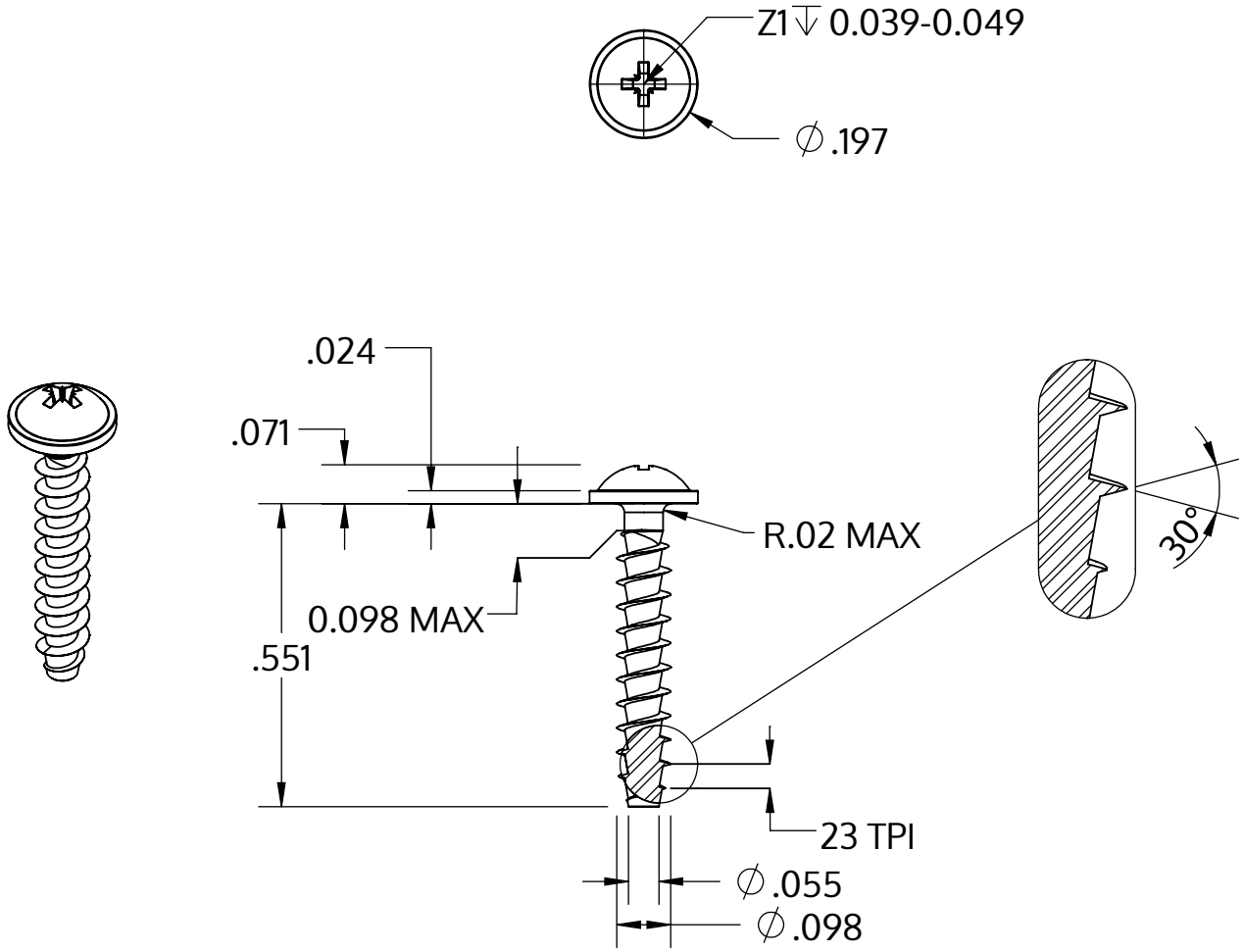

Metric size	M2.5 x 1.12 mm
US size (converted)	#3-23
	Tolerances [inch]
Length	+/- 0.021
Head diameter	+0 / -0.018
Head height	+/- 0.004
Thread diameter	+0.005 / -0

Descrizione	STP21A 2.5x14.0 - Z1
Materiale	acciaio inossidabile A2
Superficie	bianco-decapato e passivato
Peso	0.432 kg / 1000 pezzi

SCREWERK	**STP21A0250140E**	
_Zoll Zeichnung Größe A	Scala 3:1	2024-10