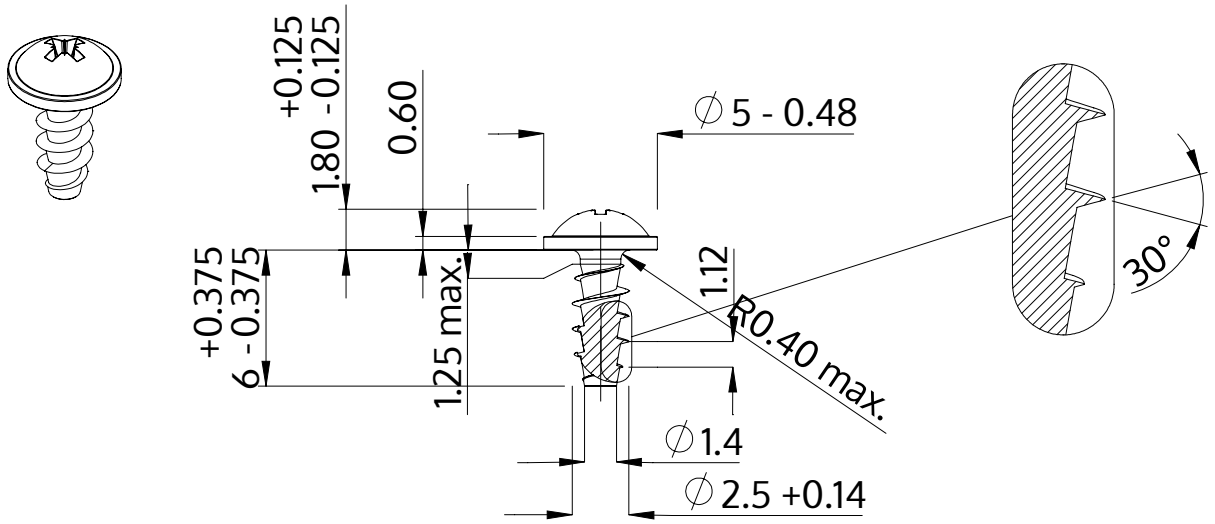

Description	STP21A 2.5x6.0 - Z1
Material	stainless-steel A2
Surface	bright, pickled and passivated
Weight	0.268 kg / 1000 pieces

SCREWERK	**STP21A0250060E**	
Metric Drawing A4	Scale None:1	2024-04