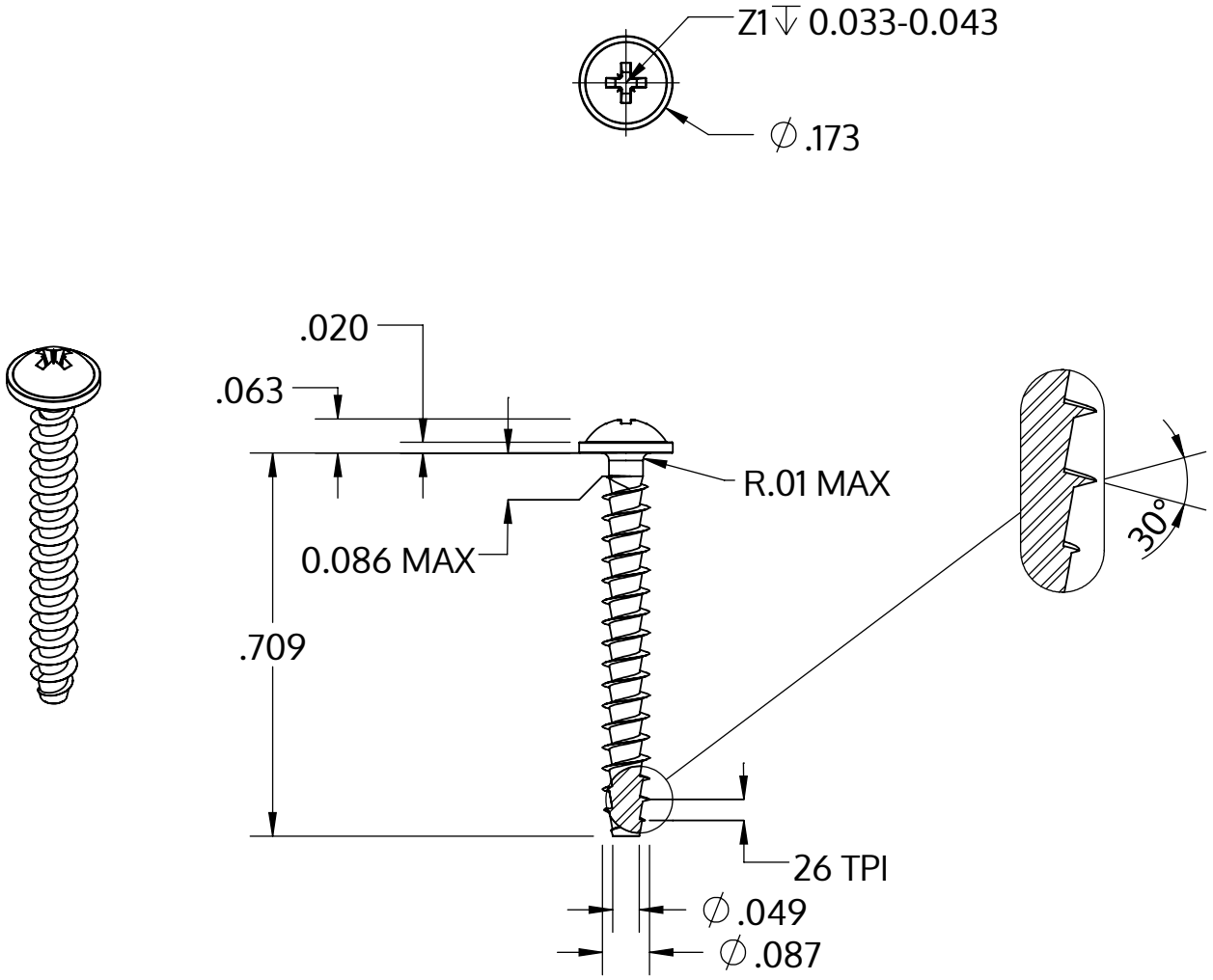


| | |
|---|---|
| Metric size | M2.2 x 0.98 mm |
| US size (converted) | #2-26 |
| | Tolerances [inch] |
| Length | +/- 0.021 |
| Head diameter | +0 / -0.018 |
| Head height | +/- 0.004 |
| Thread diameter | +0.005 / -0 |

| | |
|---|---|
| Beschrijving | STP21A 2.2x18.0 - Z1 |
| Materiaal | roestvrij staal A2 |
| Oppervlak | blank, geetst en gepassieveerd |
| Gewicht | 0.380 kg / 1000 stuk |

| | | |
|---|---|---|
| SCREWERK | **STP21A0220180E** | |
| _Zoll Zeichnung Größe A | Schaal 3:1 | 2024-10 |