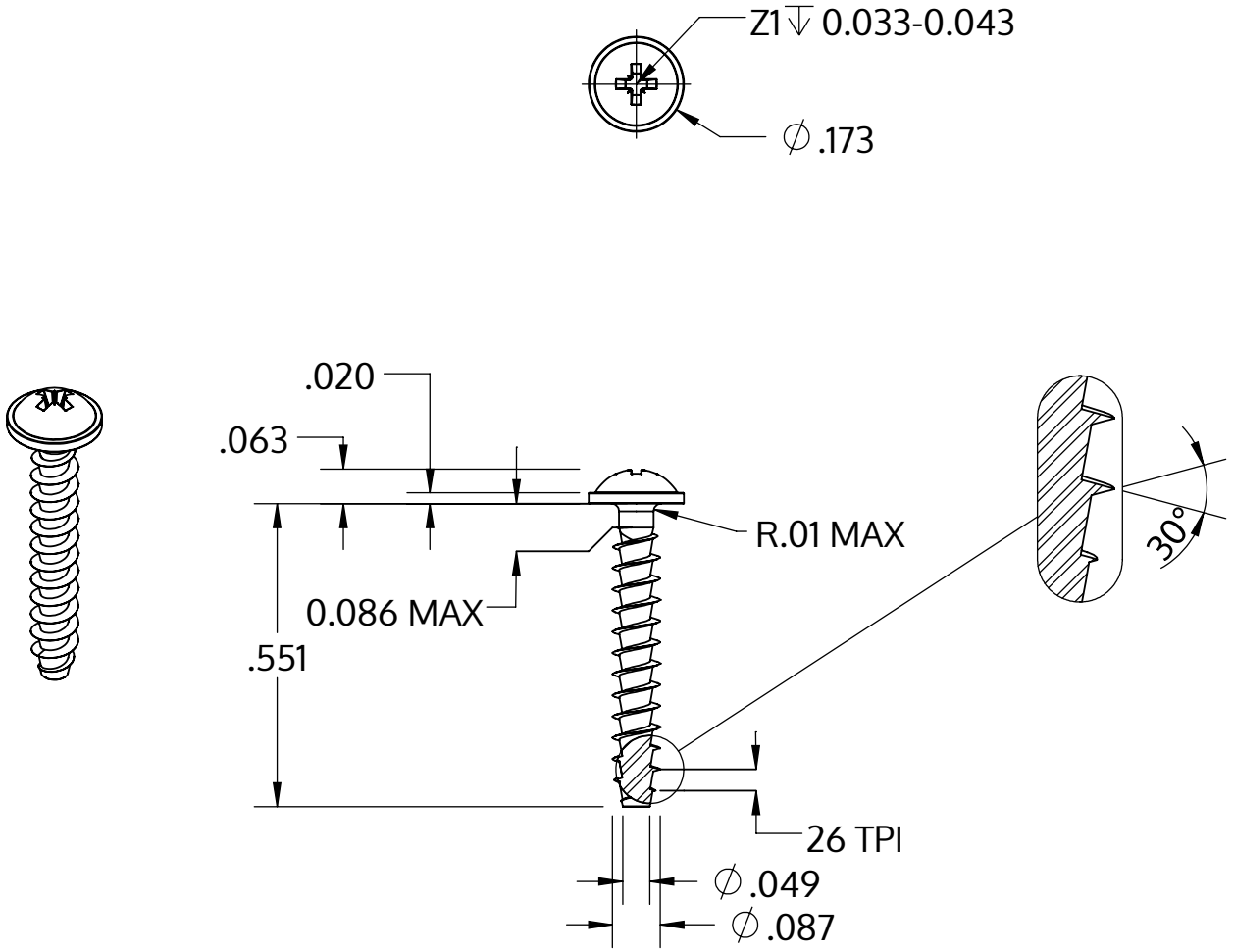

Metric size	M2.2 x 0.98 mm
US size (converted)	#2-26
	Tolerances [inch]
Length	+/- 0.021
Head diameter	+0 / -0.018
Head height	+/- 0.004
Thread diameter	+0.005 / -0

Description	STP21A 2.2x14.0 - Z1
Matière	acier inoxydable A2
Surface	brillant décapé et passivé
Poids	0.316 kg / 1000 Unité

SCREWERK	**STP21A0220140E**	
_Zoll Zeichnung Größe A	Redimensionner 3:1	2024-10