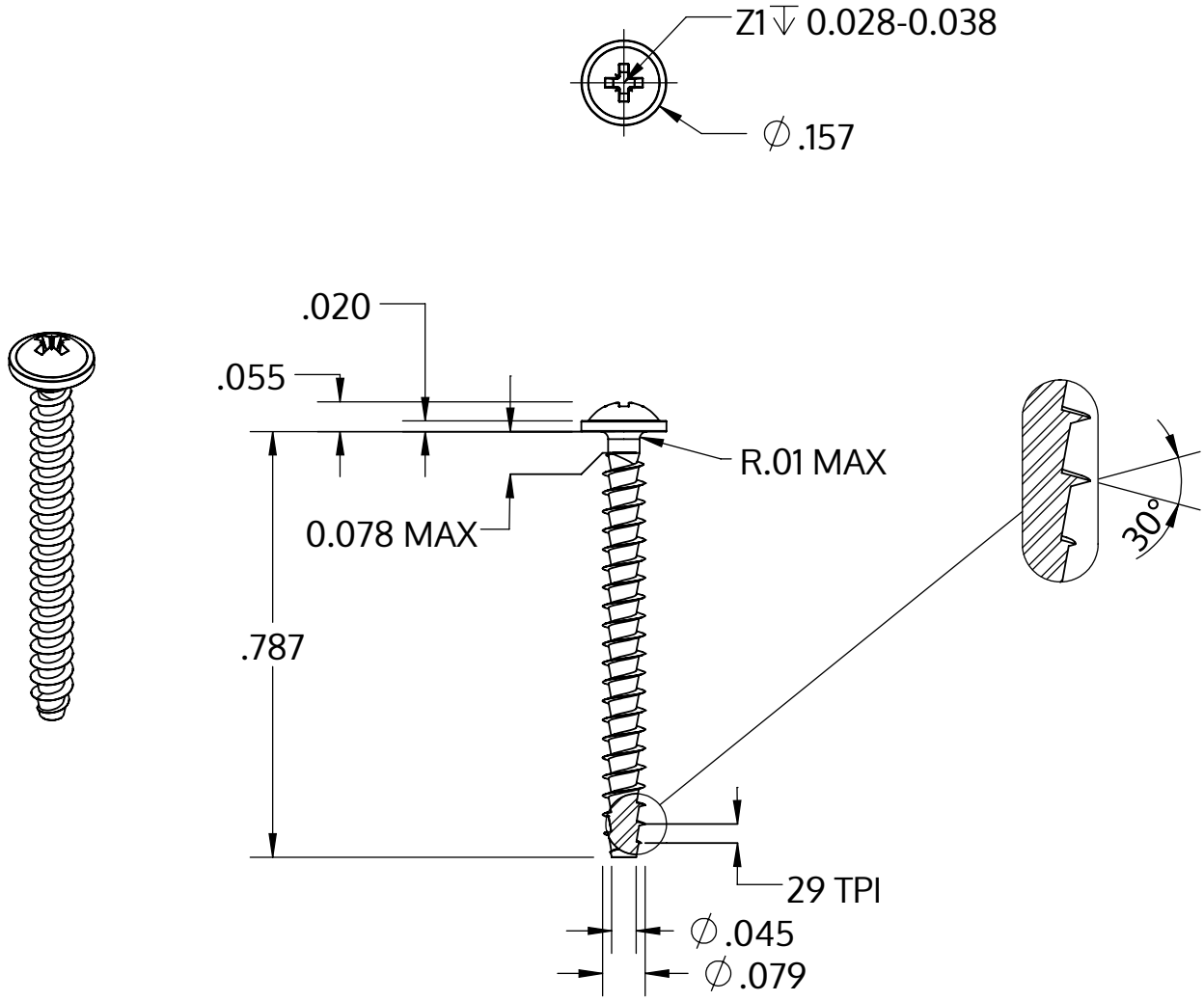


| | |
|---|---|
| Metric size | M2 x 0.89 mm |
| US size (converted) | #1.5-29 |
| | Tolerances [inch] |
| Length | +/- 0.025 |
| Head diameter | +0 / -0.018 |
| Head height | +/- 0.004 |
| Thread diameter | +0.005 / -0 |

| | |
|---|---|
| Opis | STP21A 2.0x20.0 - Z1 |
| Materiał | Stal szlachetna A2 |
| Powierzchnia | Prosta, bejcowana i pasywowana |
| Waga | 0.378 kg / 1000 sztuk |

| | | |
|---|---|---|
| SCREWERK | **STP21A0200200E** | |
| _Zoll Zeichnung Größe A | Skala 3:1 | 2024-10 |