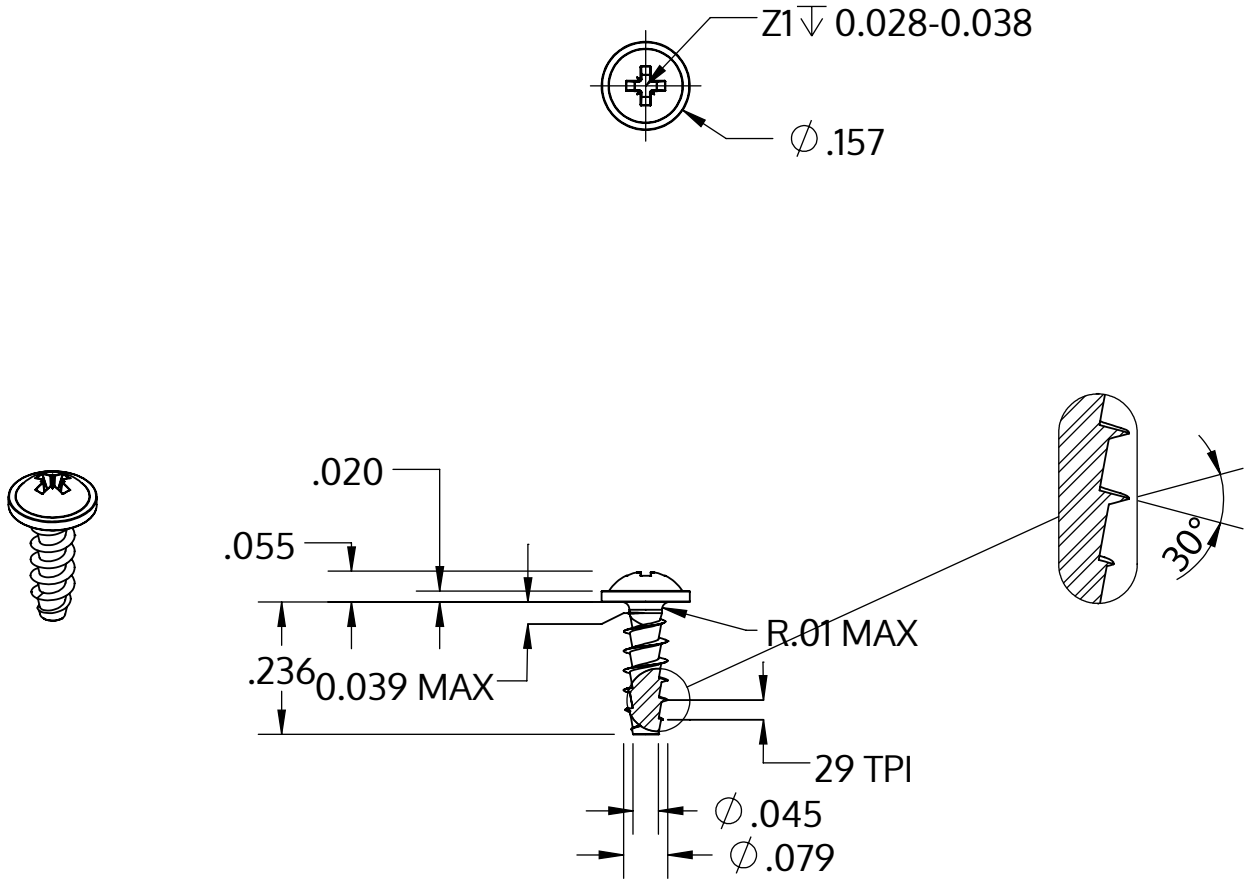


| | |
|---|---|
| Metric size | M2 x 0.89 mm |
| US size (converted) | #1.5-29 |
| | Tolerances [inch] |
| Length | +/- 0.014 |
| Head diameter | +0 / -0.018 |
| Head height | +/- 0.004 |
| Thread diameter | +0.005 / -0 |

| | |
|---|---|
| Beskrivelse | STP21A 2.0x6.0 - Z1 |
| Materiale | Stål, forædlet |
| Overflade | galvaniseret 5-7 µm, tempret, blå / transparent passiveret |
| Vægt | 0.176 kg / 1000 stykke |

| | | |
|---|---|---|
| SCREWERK | **STP21A0200060S** | |
| _Zoll Zeichnung Größe A | Skalering 3:1 | 2024-10 |