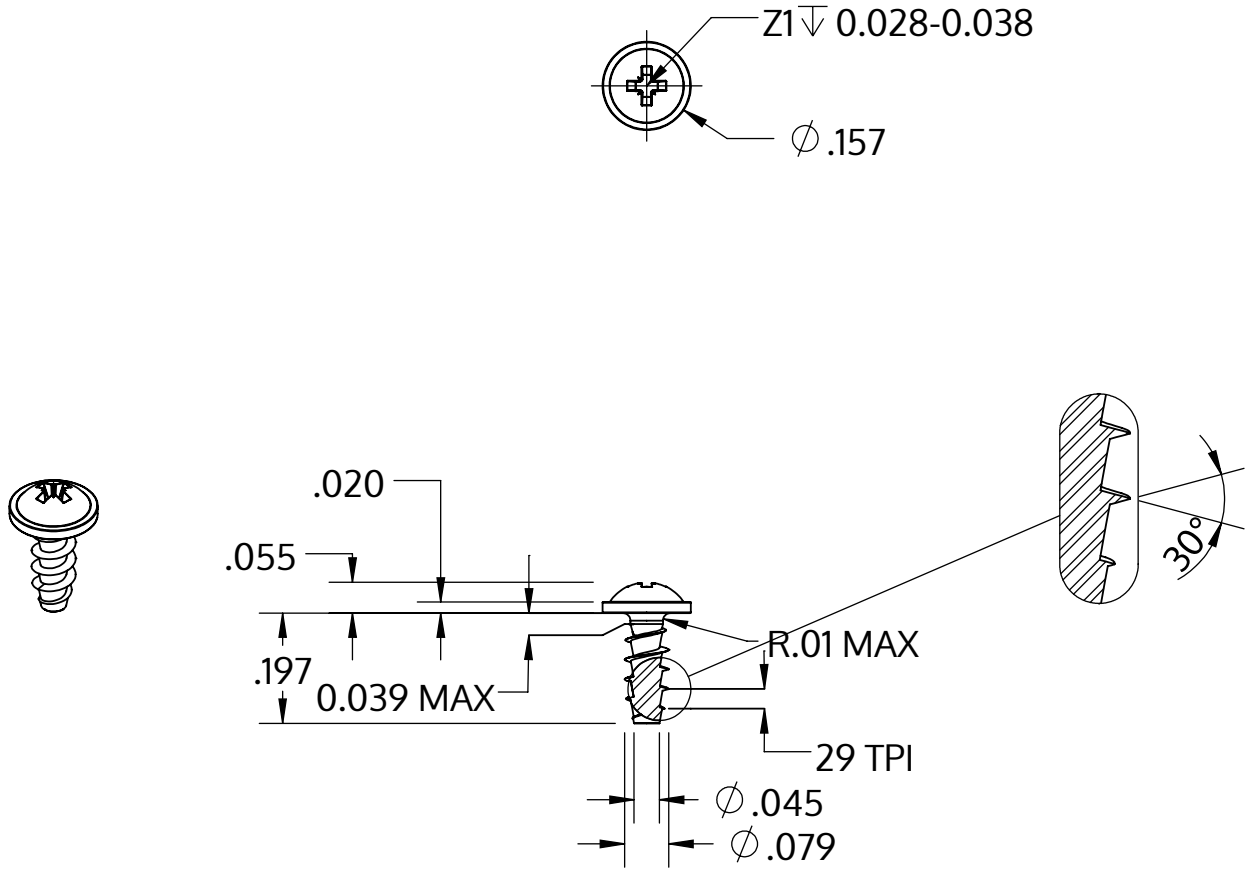

Metric size	M2 x 0.89 mm
US size (converted)	#1.5-29
	Tolerances [inch]
Length	+/- 0.014
Head diameter	+0 / -0.018
Head height	+/- 0.004
Thread diameter	+0.005 / -0

Description	STP21A 2.0x5.0 - Z1
Material	stainless-steel A2
Surface	bright, pickled and passivated
Weight	0.162 kg / 1000 pieces

SCREWERK	**STP21A0200050E**	
Inch Drawing Size A	Scale 3:1	2024-10