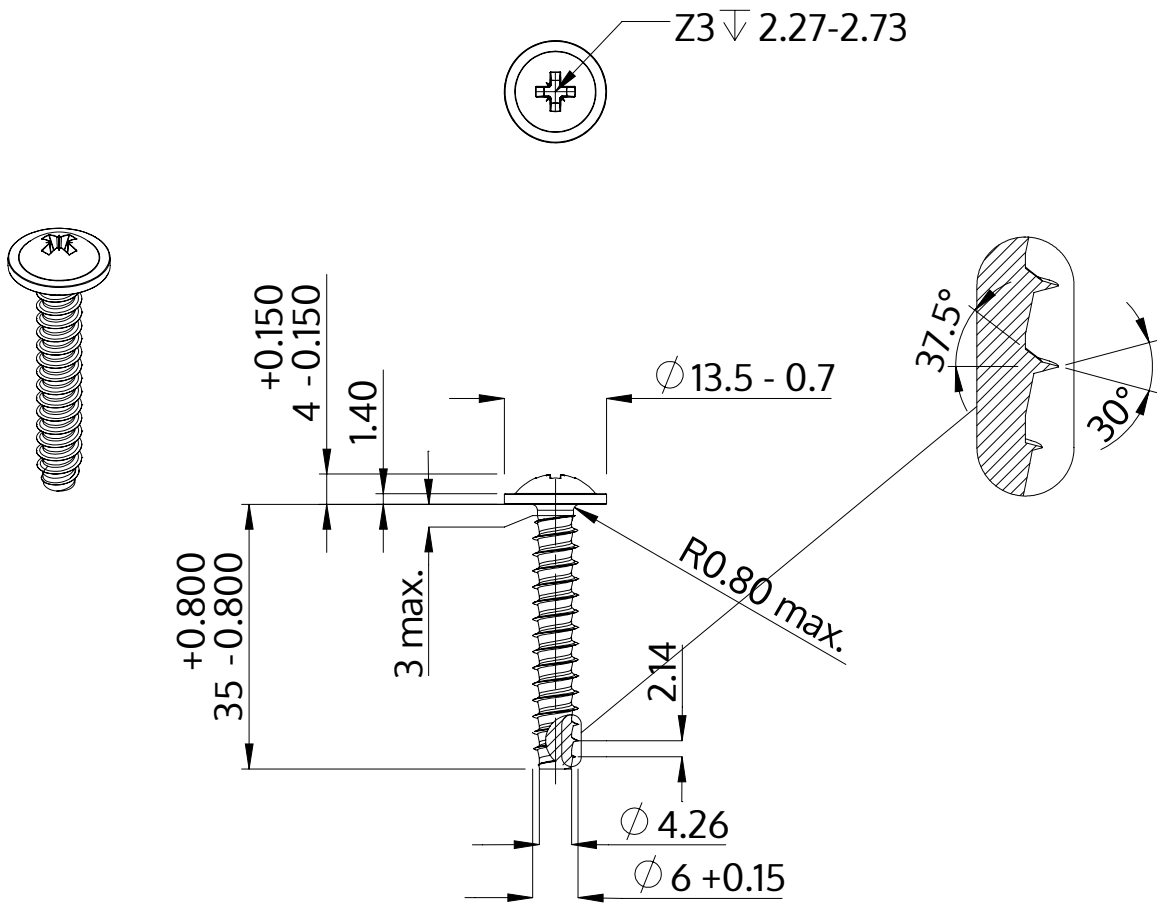

Description	STP21 6.0x35.0 - Z3
Material	steel, hardened
Surface	zinc-plated 5-7 µm, baked, blue / transparent passivated
Weight	6.828 kg / 1000 pieces

SCREWERK	**STP210600350S**	
Metric Drawing A4	Scale 1:1	2024-10