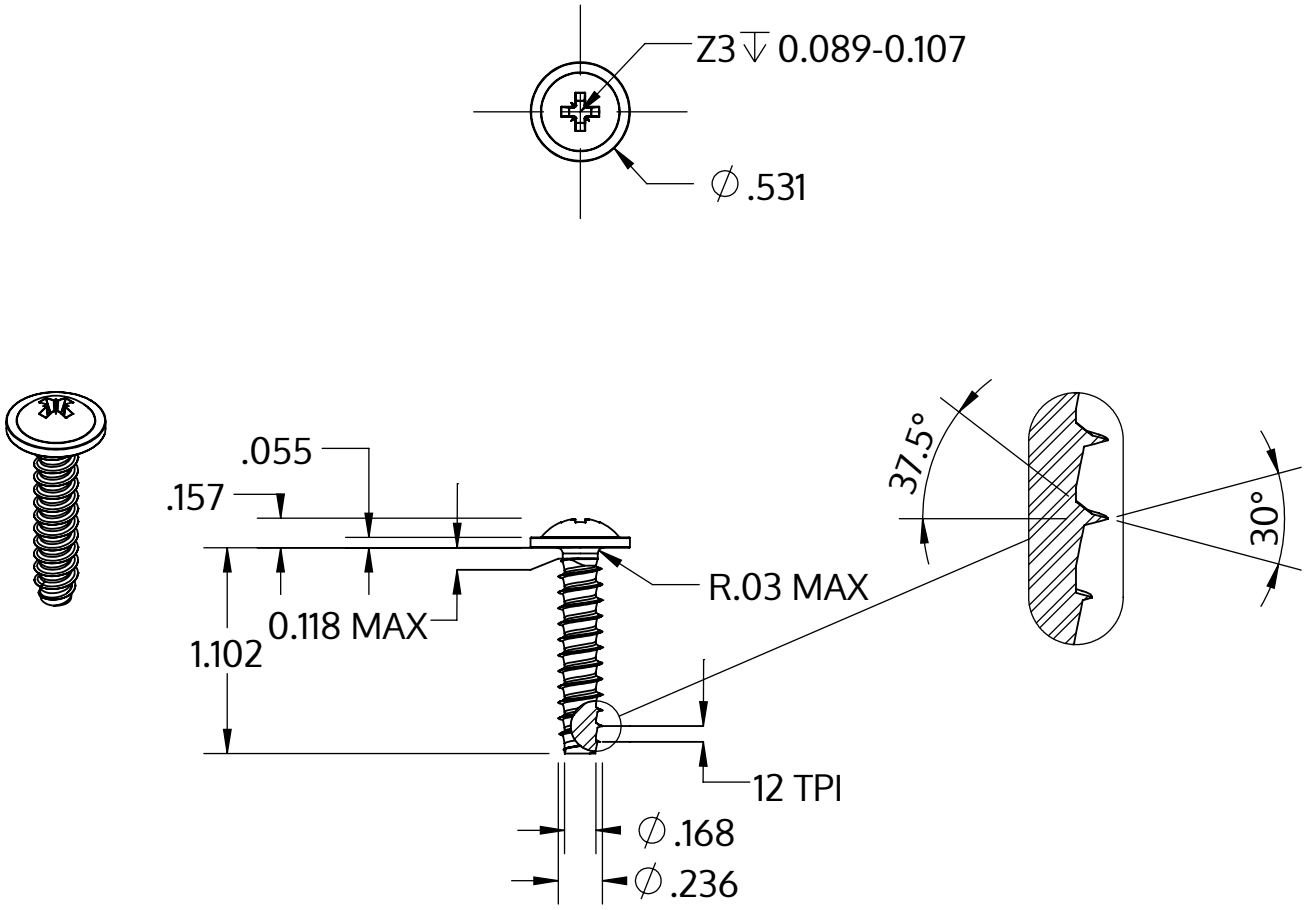


| | |
|---|---|
| Metric size | M6 x 2.14 mm |
| US size (converted) | #0.236-12 |
| | Tolerances [inch] |
| Length | +/- 0.025 |
| Head diameter | +0 / -0.027 |
| Head height | +/- 0.005 |
| Thread diameter | +0.005 / -0 |

| | |
|---|---|
| Beskrivelse | STP21 6.0x28.0 - Z3 |
| Materiale | Ædelstål A2 |
| Overflade | blank, bejdset og passiveret |
| Vægt | 5.879 kg / 1000 stykke |

| | | |
|---|---|---|
| SCREWERK | **STP210600280E** | |
| _Zoll Zeichnung Größe A | Skalering 1:1 | 2024-10 |