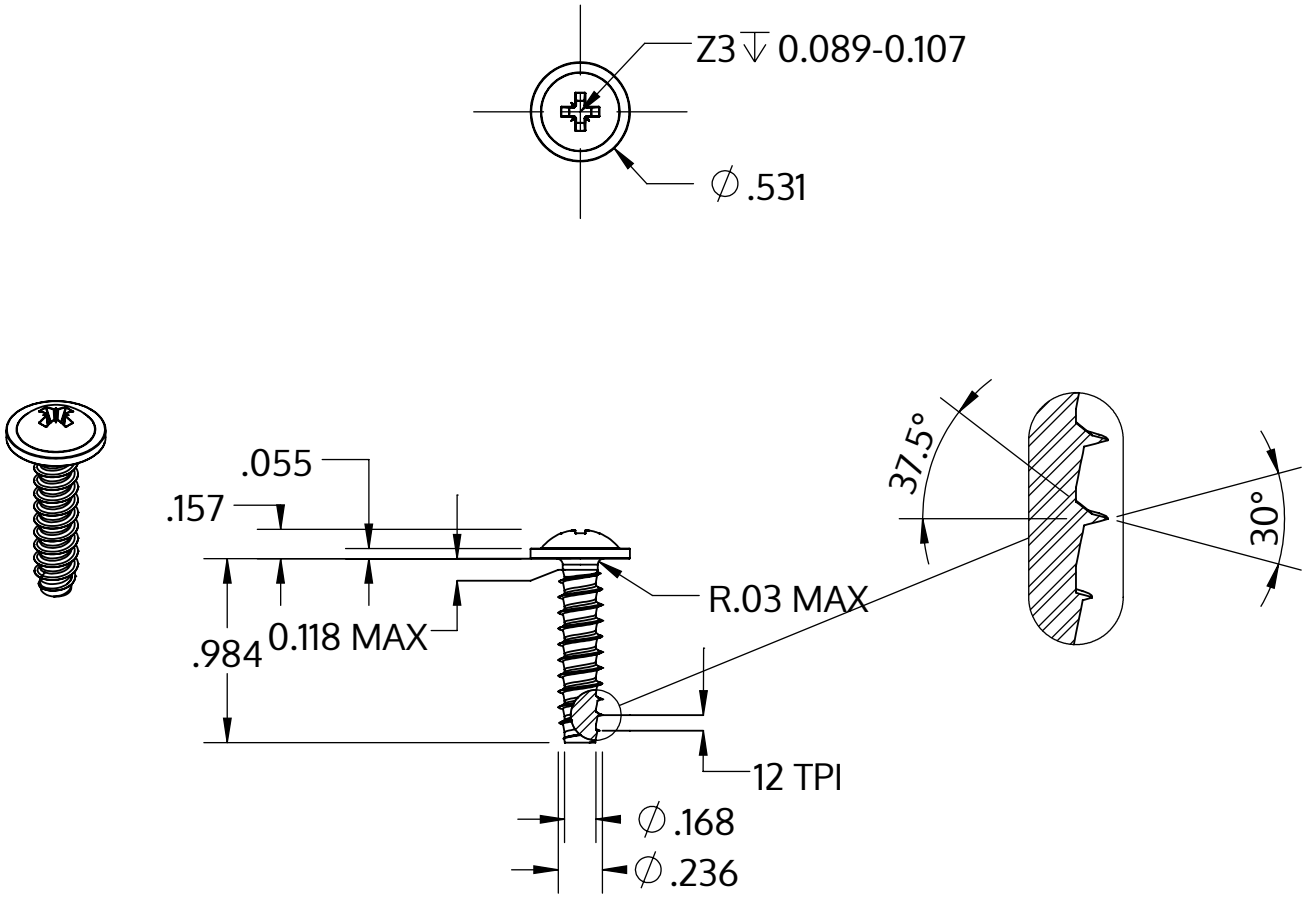

Metric size	M6 x 2.14 mm
US size (converted)	#0.236-12
	Tolerances [inch]
Length	+/- 0.025
Head diameter	+0 / -0.027
Head height	+/- 0.005
Thread diameter	+0.005 / -0

Description	STP21 6.0x25.0 - Z3
Material	stainless steel A4
Surface	bright, pickled and passivated
Weight	5.472 kg / 1000 pieces

SCREWERK	**STP210600250C**	
Inch Drawing Size A	Scale 1:1	2024-10