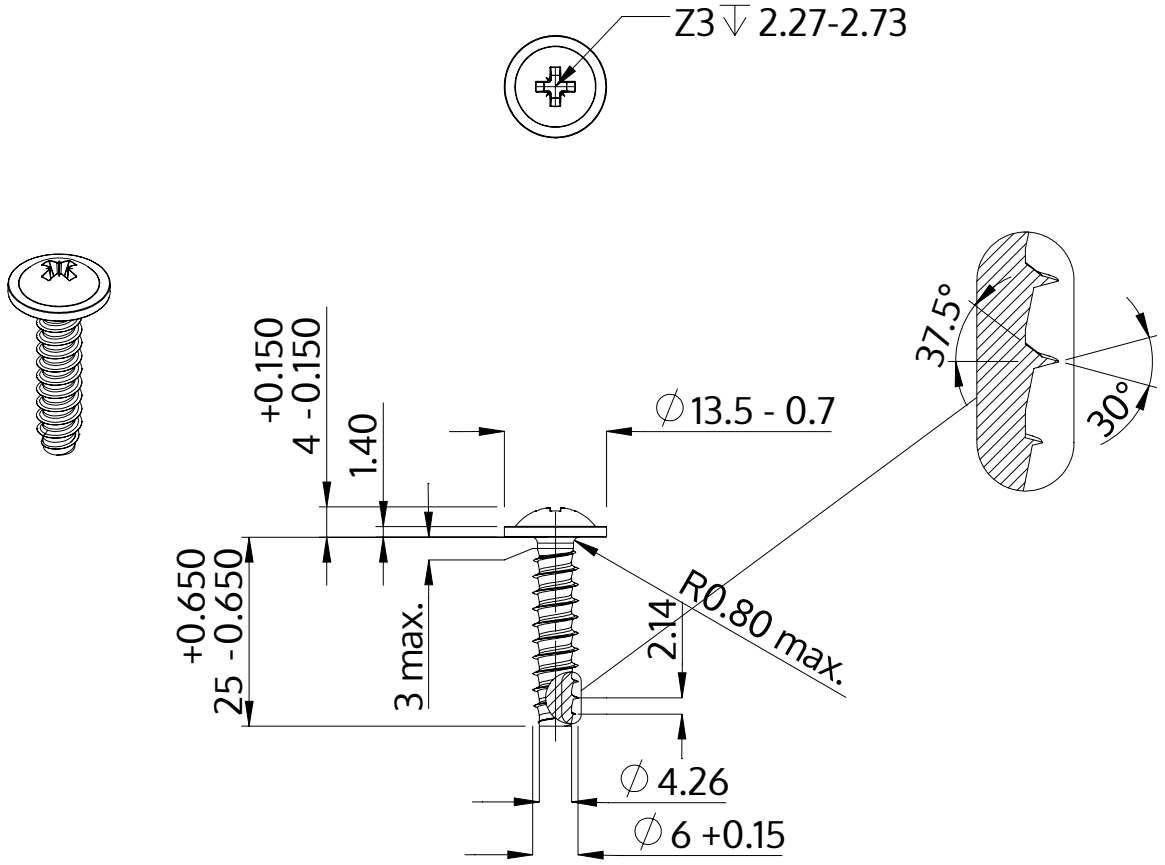

Description	STP21 6.0x25.0 - Z3
Material	stainless steel A4
Surface	bright, pickled and passivated
Weight	5.472 kg / 1000 pieces

SCREWERK	**STP210600250C**	
Metric Drawing A4	Scale 1:1	2024-10