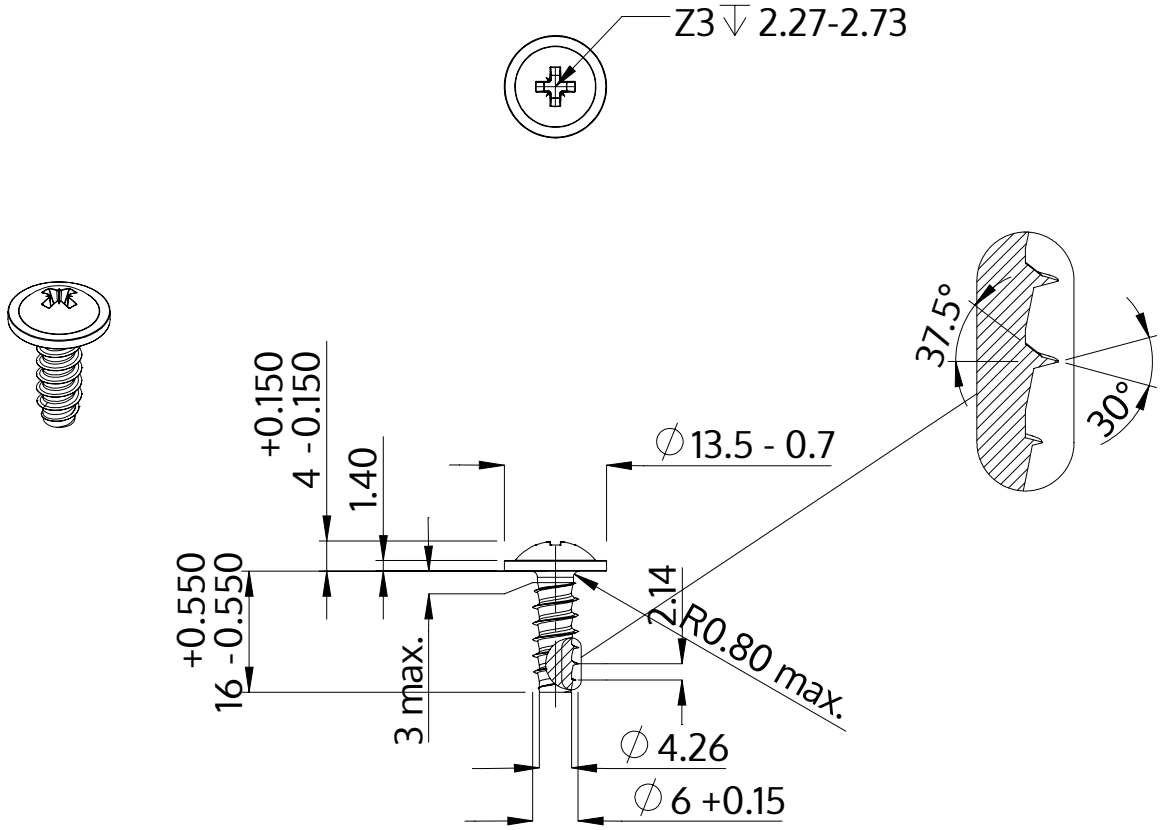

Description	STP21 6.0x16.0 - Z3
Material	stainless steel A4
Surface	bright, pickled and passivated
Weight	4.251 kg / 1000 pieces

SCREWERK	**STP210600160C**	
Metric Drawing A4	Scale None:1	2024-04