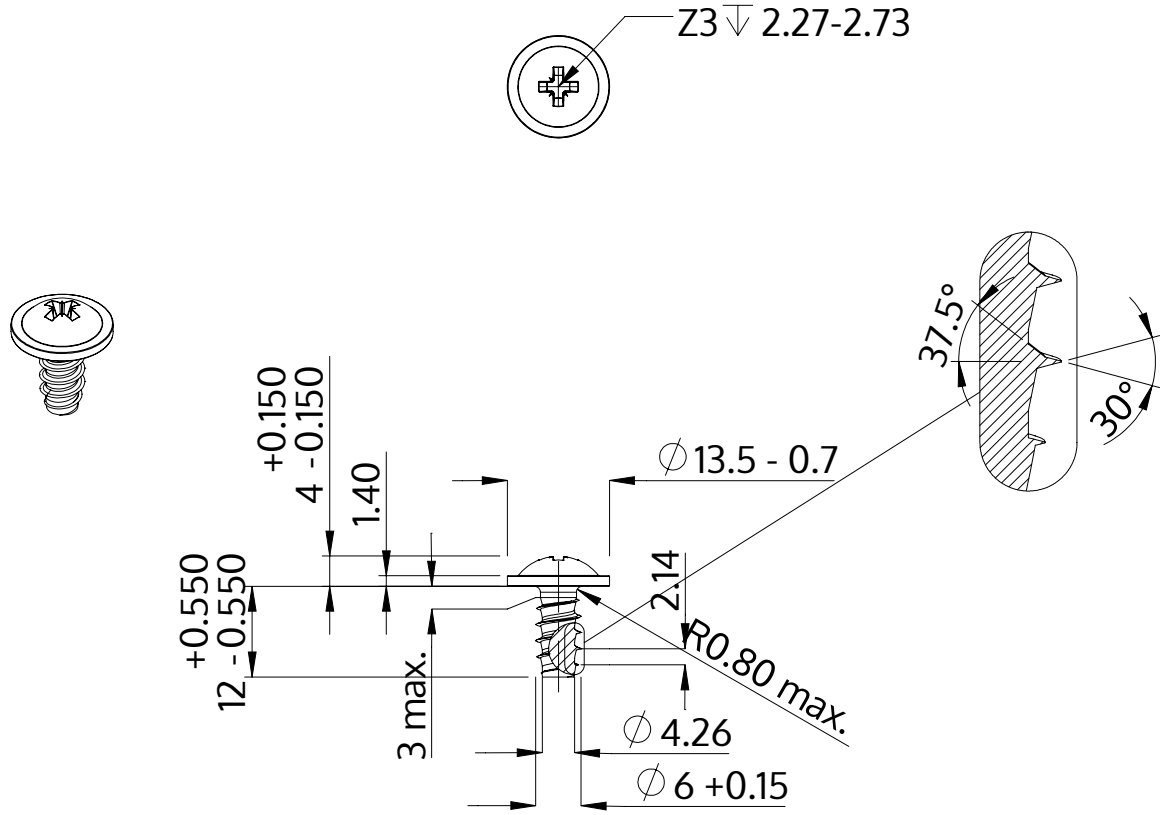


| | |
|---|---|
| Description | STP21 6.0x12.0 - Z3 |
| Material | stainless-steel A2 |
| Surface | bright, pickled and passivated |
| Weight | 3.708 kg / 1000 pieces |

| | | |
|---|---|---|
| SCREWERK | **STP210600120E** | |
| Metric Drawing A4 | Scale None:1 | 2024-04 |