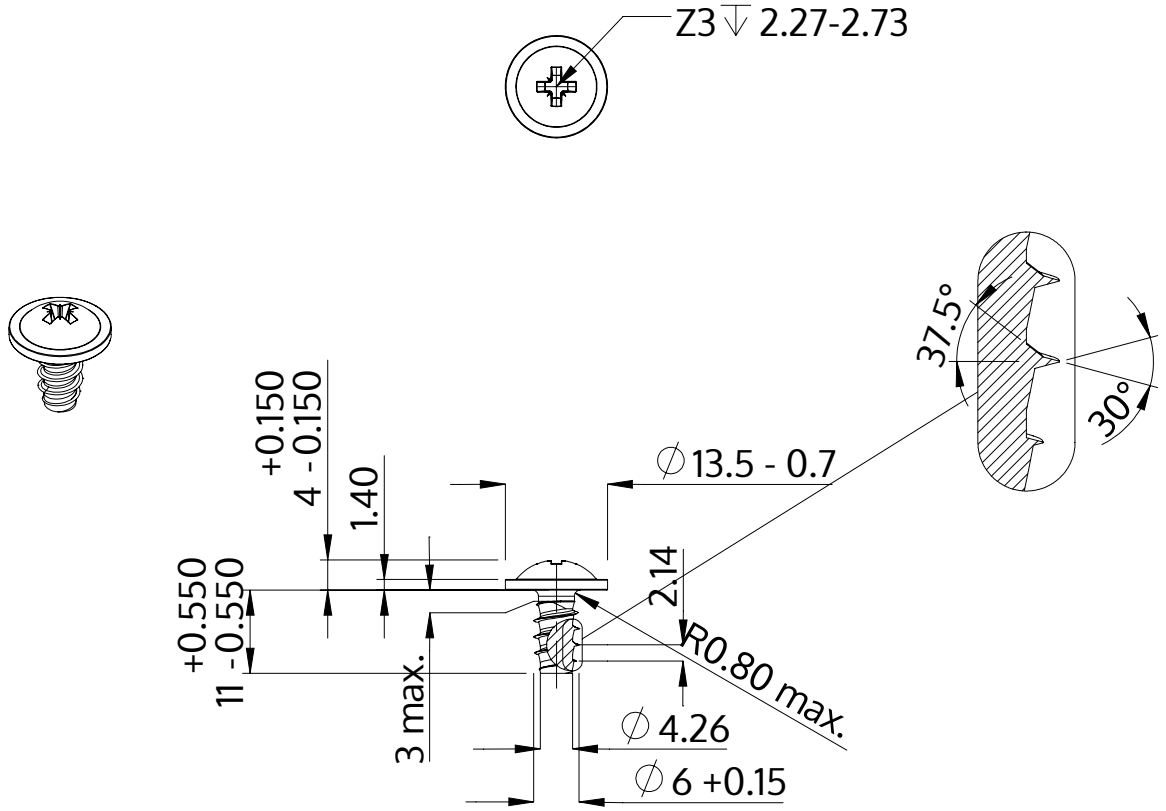

Description	STP21 6.0x11.0 - Z3
Material	steel, hardened
Surface	Zinc-Nickel-plated min. 5µm, passivated black/ Cr-VI-free, baked, sealed
Weight	3.573 kg / 1000 pieces

SCREWERK	**STP210600110B**	
Metric Drawing A4	Scale 1:1	2024-10