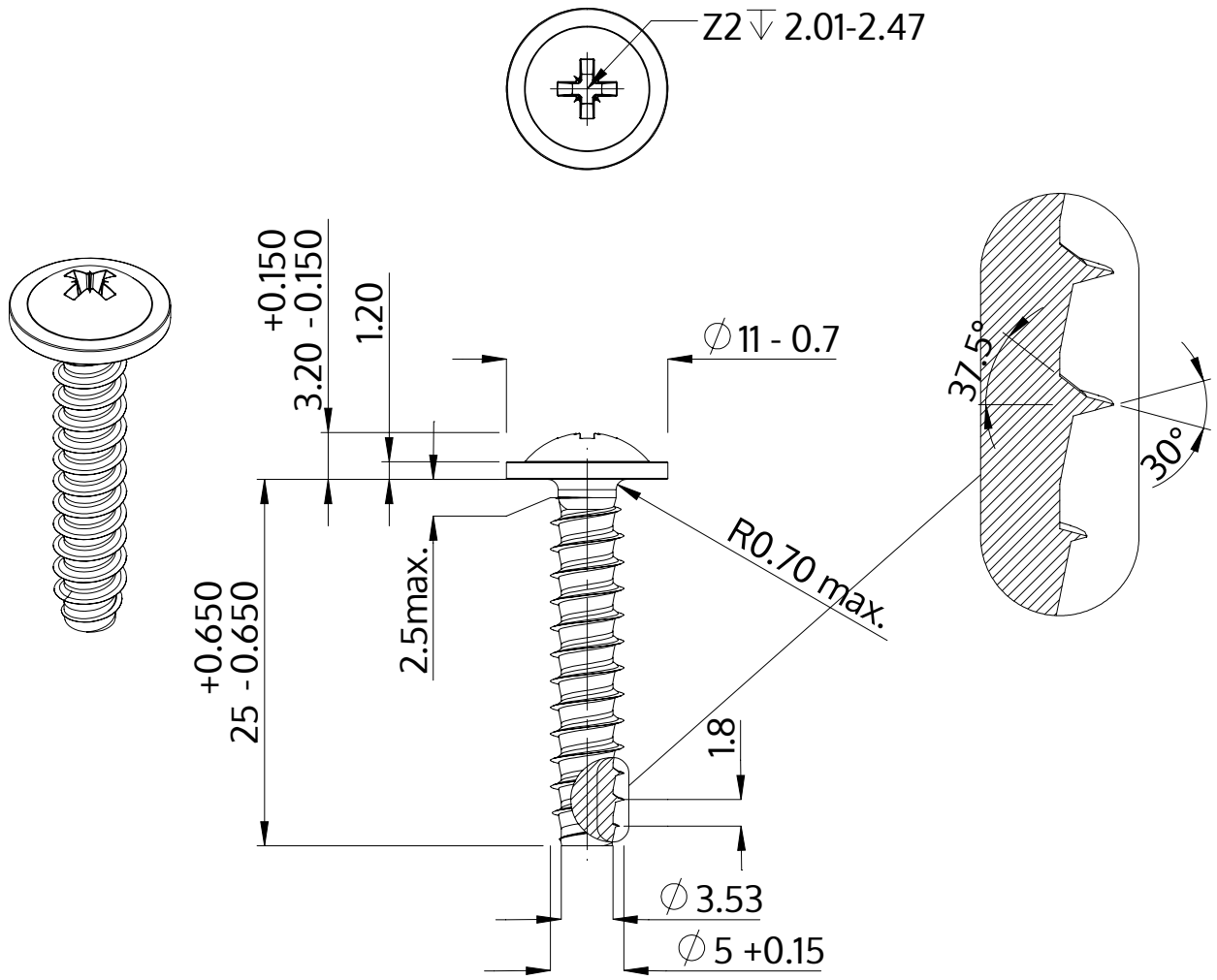

Description	STP21 5.0x25.0 - Z2
Material	stainless-steel A2
Surface	bright, pickled and passivated
Weight	3.553 kg / 1000 pieces

SCREWERK	**STP210500250E**	
Metric Drawing A4	Scale None:1	2024-04