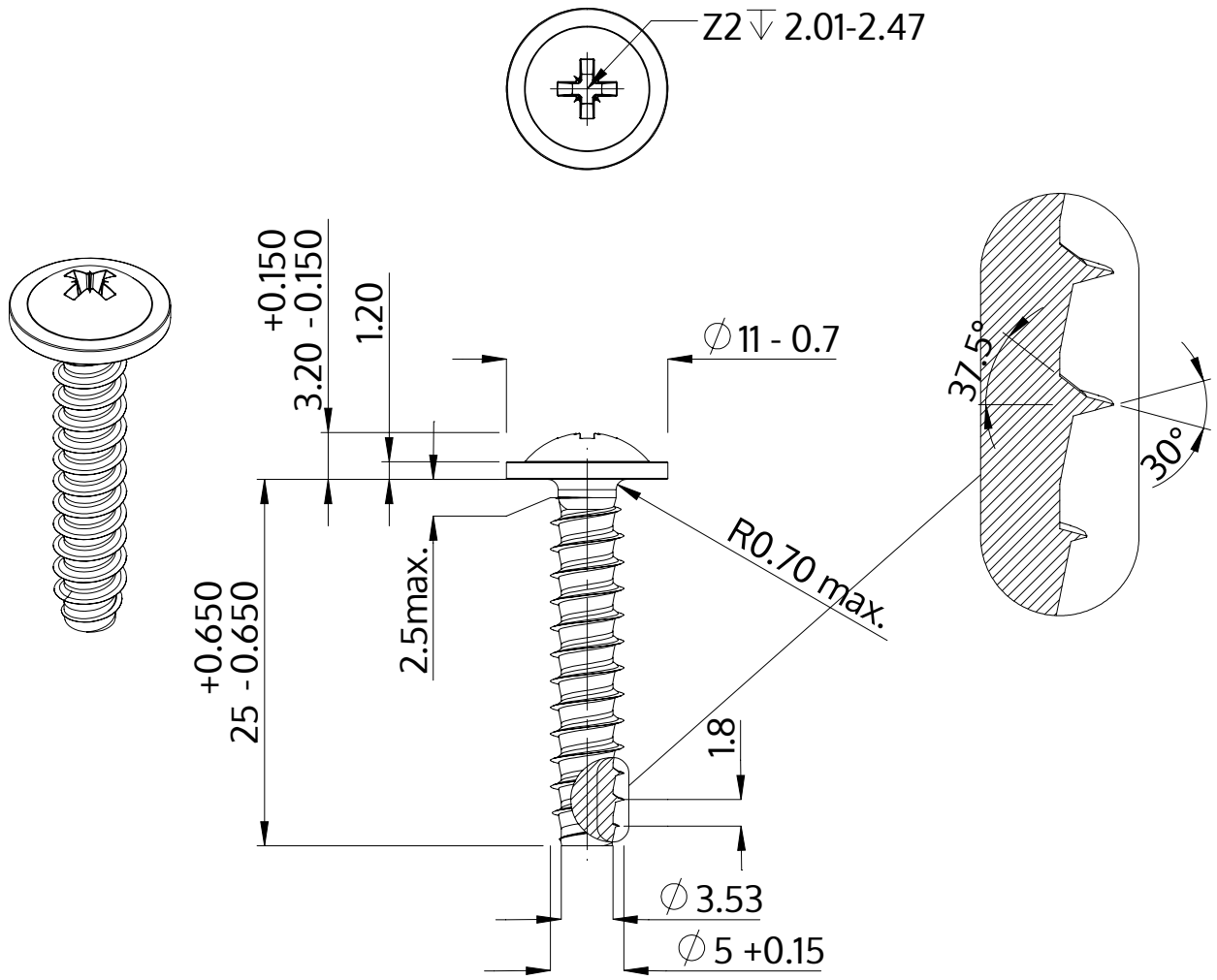


| | |
|---|---|
| Description | STP21 5.0x25.0 - Z2 |
| Material | steel, hardened |
| Surface | Zinc-Nickel-plated min. 5µm, passivated black/ Cr-VI-free, baked, sealed |
| Weight | 3.553 kg / 1000 pieces |

| | | |
|---|---|---|
| SCREWERK | **STP210500250B** | |
| Metric Drawing A4 | Scale None:1 | 2024-05 |