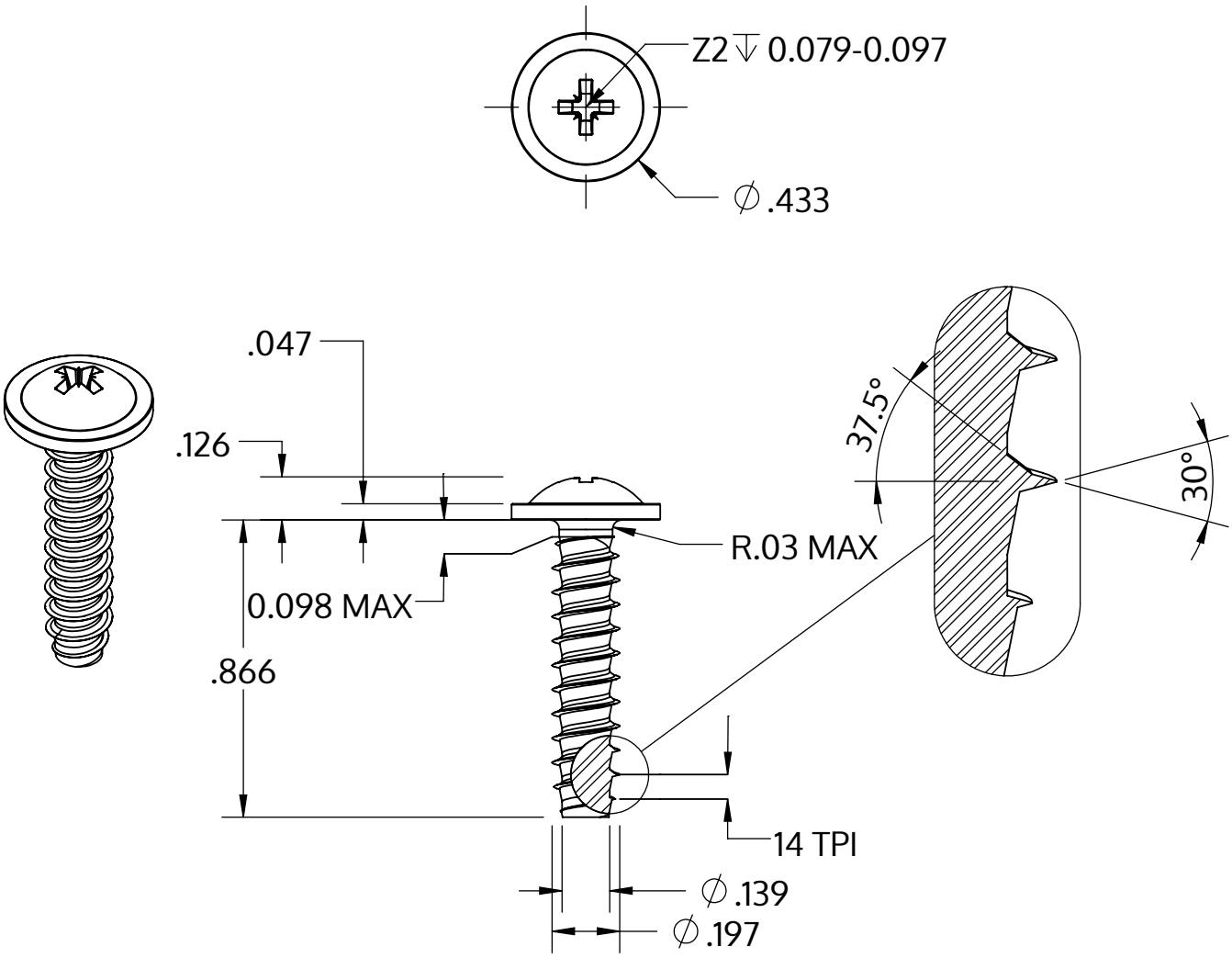


| | |
|---|---|
| Metric size | M5 x 1.8 mm |
| US size (converted) | #11-14 |
| | Tolerances [inch] |
| Length | +/- 0.025 |
| Head diameter | +0 / -0.027 |
| Head height | +/- 0.005 |
| Thread diameter | +0.005 / -0 |

| | |
|---|---|
| Descriere | STP21 5.0x22.0 - Z2 |
| Material | oţel inoxidabil A4 |
| Exterior | neacoperit, murat și pasivat |
| Greutate | 3.270 kg / 1000 unități |

| | | |
|---|---|---|
| SCREWERK | **STP210500220C** | |
| _Zoll Zeichnung Größe A | Scalarea 2:1 | 2024-10 |