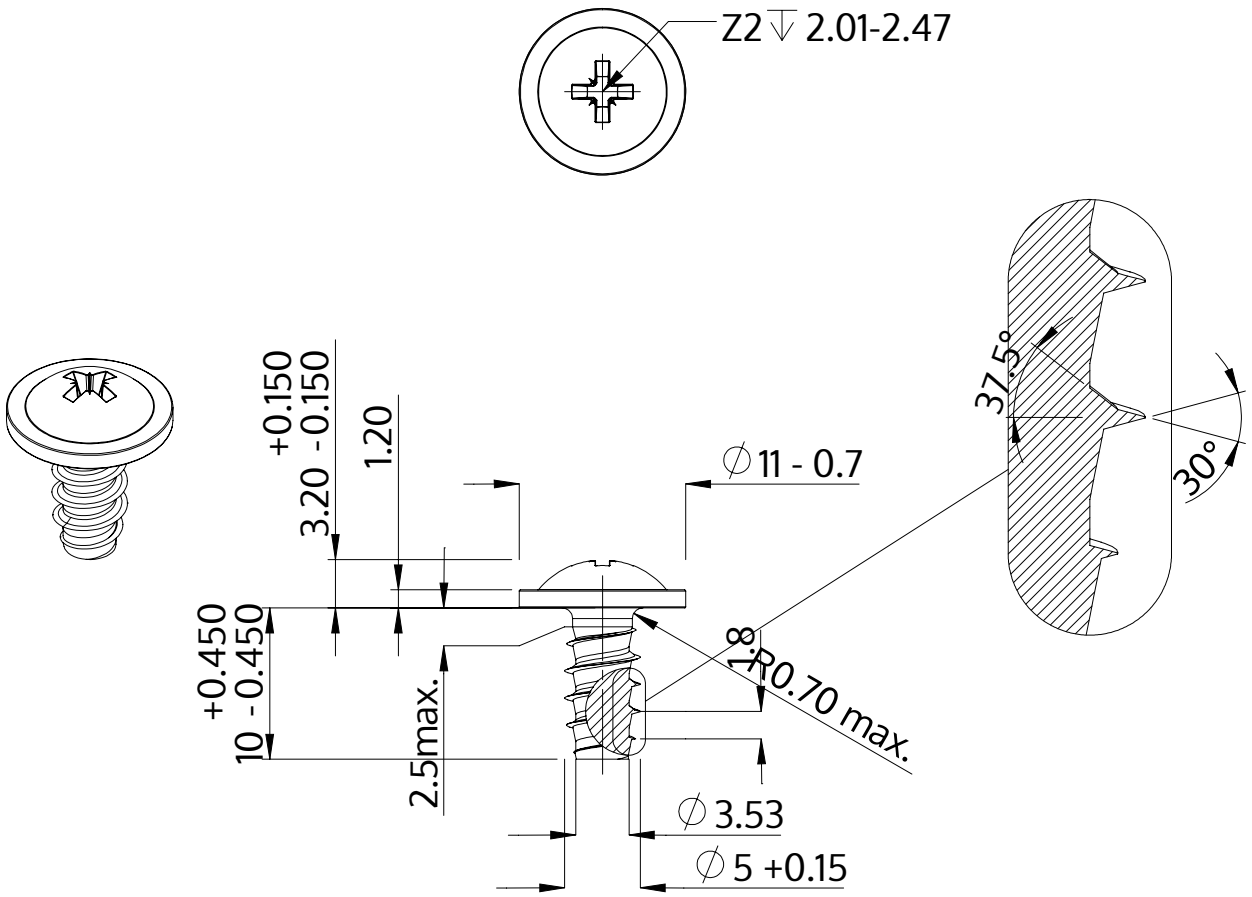

Description	STP21 5.0x10.0 - Z2
Material	stainless steel A4
Surface	bright, pickled and passivated
Weight	2.134 kg / 1000 pieces

SCREWERK	**STP210500100C**	
Metric Drawing A4	Scale 2:1	2024-10