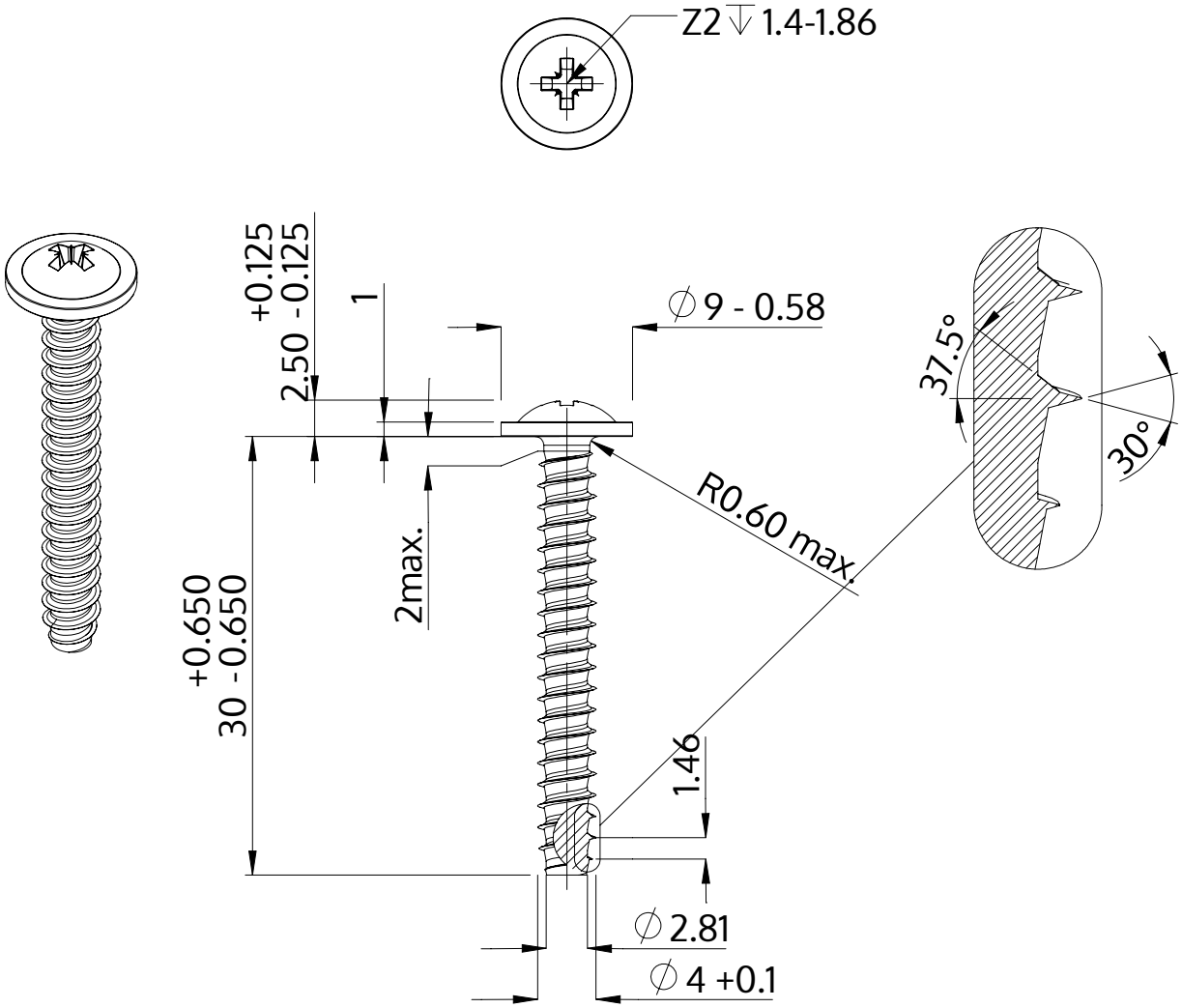

Description	STP21 4.0x30.0 - Z2
Material	stainless-steel A2
Surface	bright, pickled and passivated
Weight	2.525 kg / 1000 pieces

SCREWERK	**STP210400300E**	
Metric Drawing A4	Scale 2:1	2024-10