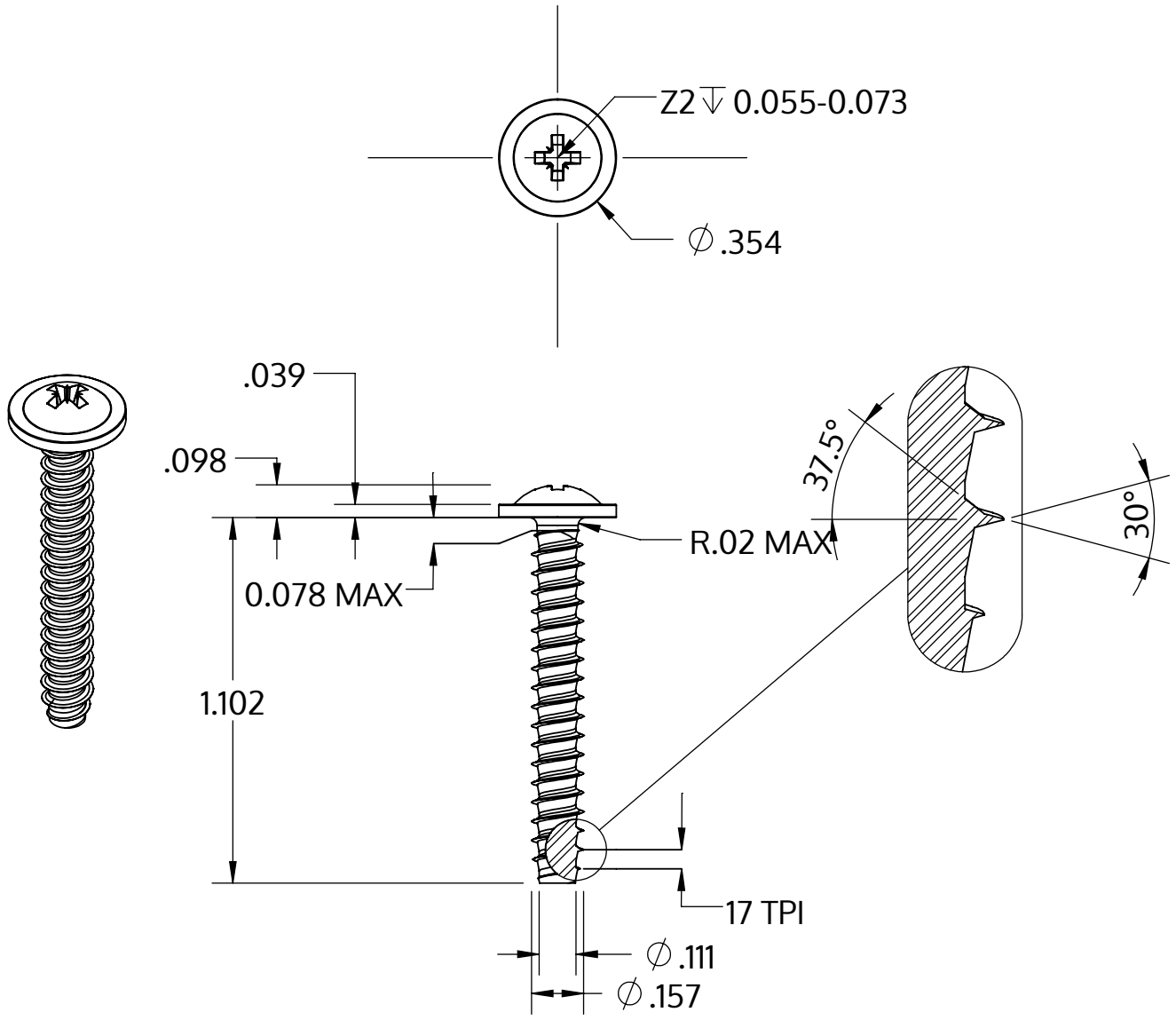


| | |
|---|---|
| Metric size | M4 x 1.46 mm |
| US size (converted) | #8-17 |
| | Tolerances [inch] |
| Length | +/- 0.025 |
| Head diameter | +0 / -0.022 |
| Head height | +/- 0.004 |
| Thread diameter | +0.003 / -0 |

| | |
|---|---|
| Beskrivelse | STP21 4.0x28.0 - Z2 |
| Materiale | Stål, forædlet |
| Overflade | galvaniseret 5-7 µm, tempret, blå / transparent passiveret |
| Vægt | 2.404 kg / 1000 stykke |

| | | |
|---|---|---|
| SCREWERK | **STP210400280S** | |
| _Zoll Zeichnung Größe A | Skalering 2:1 | 2024-10 |