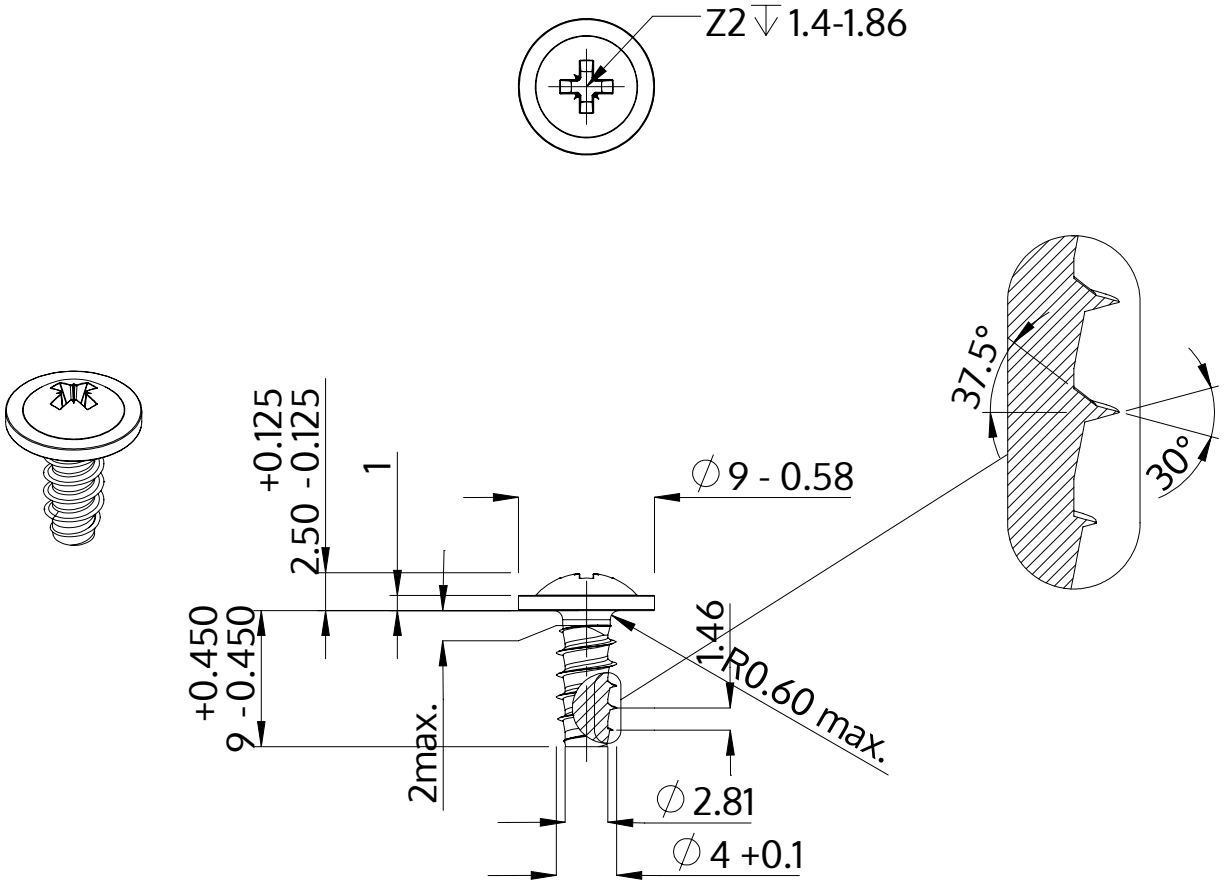

Description	STP21 4.0x9.0 - Z2
Material	stainless steel A4
Surface	bright, pickled and passivated
Weight	1.165 kg / 1000 pieces

SCREWERK	**STP210400090C**	
Metric Drawing A4	Scale None:1	2024-04