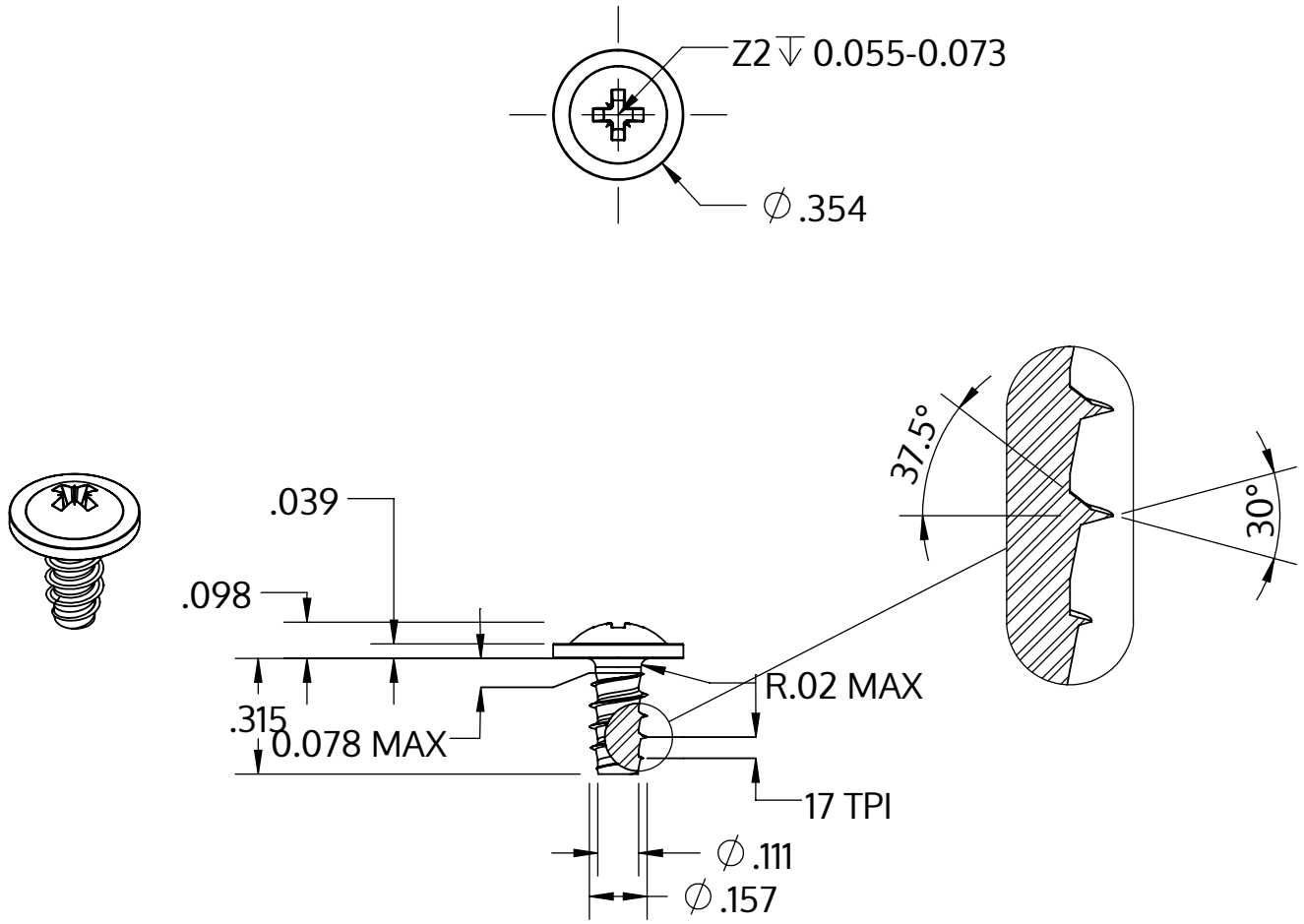

Metric size	M4 x 1.46 mm
US size (converted)	#8-17
	Tolerances [inch]
Length	+/- 0.017
Head diameter	+0 / -0.022
Head height	+/- 0.004
Thread diameter	+0.003 / -0

Description	STP21 4.0x8.0 - Z2
Matière	acier inoxydable A2
Surface	brillant décapé et passivé
Poids	1.104 kg / 1000 Unité

SCREWERK	**STP210400080E**	
_Zoll Zeichnung Größe A	Redimensionner None:1	2024-04