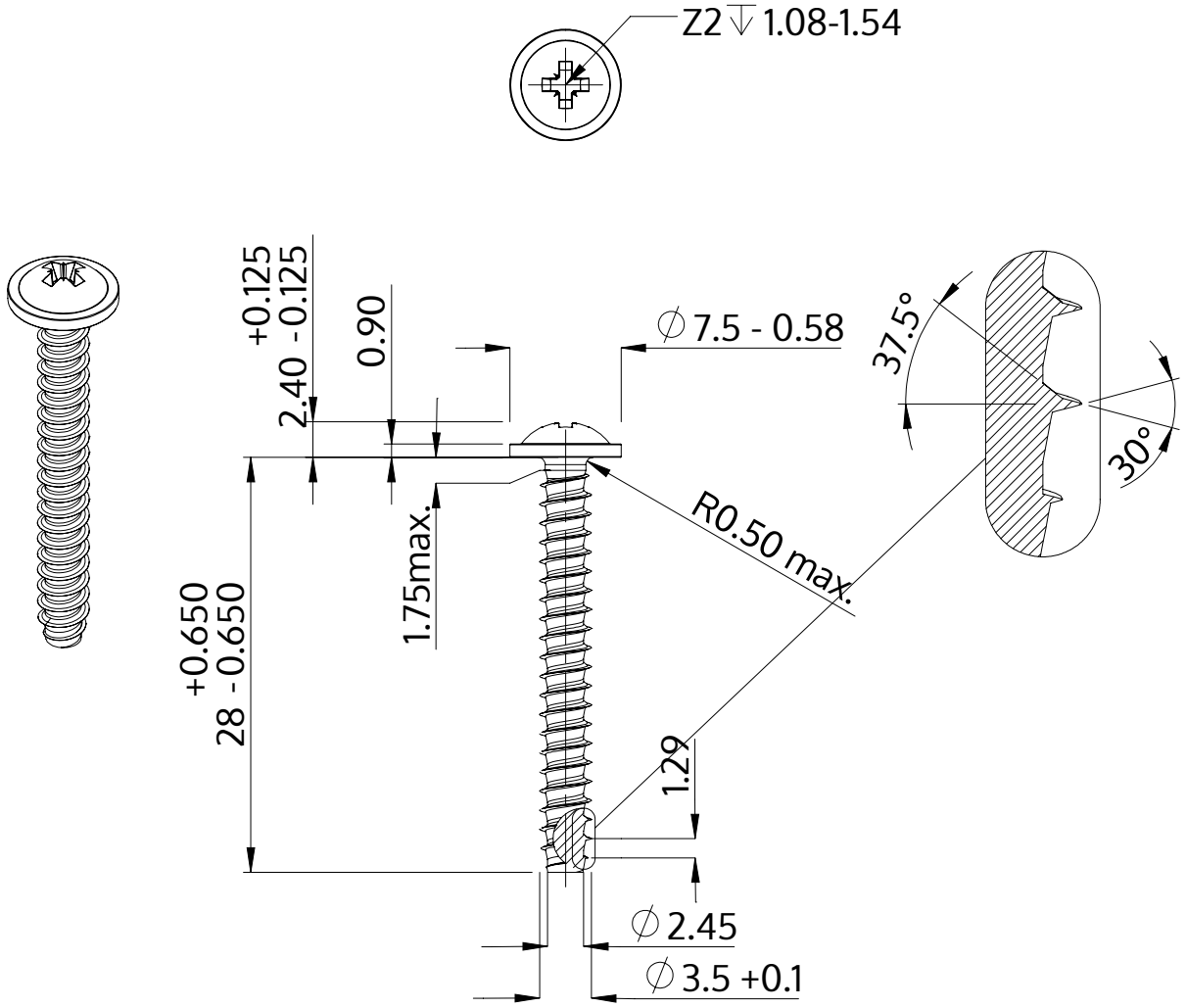

Description	STP21 3.5x28.0 - Z2
Material	steel, hardened
Surface	Zinc-Nickel-plated min. 5µm, passivated black/ Cr-VI-free, baked, sealed
Weight	1.752 kg / 1000 pieces

SCREWERK	**STP210350280B**	
Metric Drawing A4	Scale None:1	2024-04