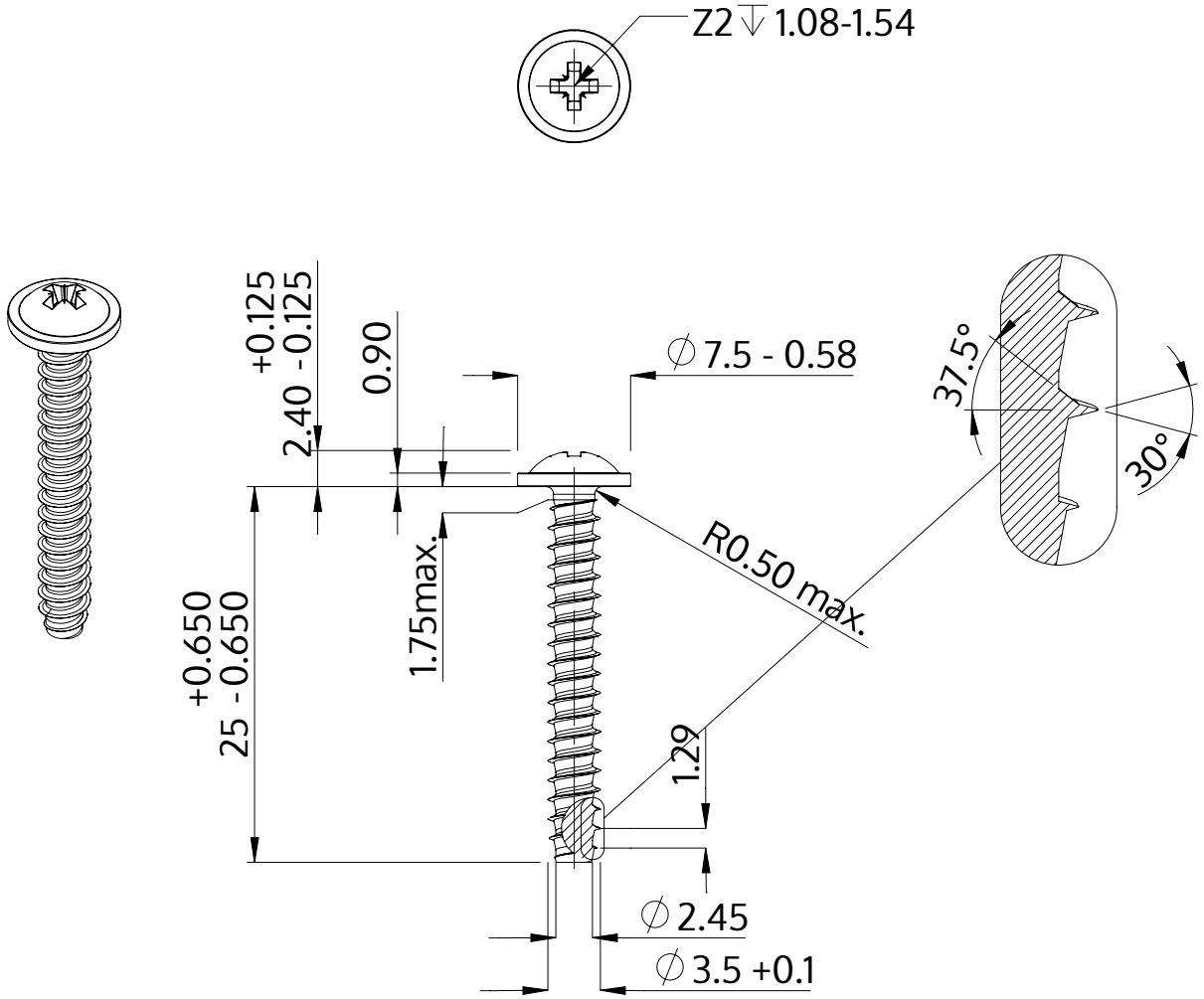

Description	STP21 3.5x25.0 - Z2
Material	stainless-steel A2
Surface	bright, pickled and passivated
Weight	1.610 kg / 1000 pieces

SCREWERK	**STP210350250E**	
Metric Drawing A4	Scale 2:1	2024-10