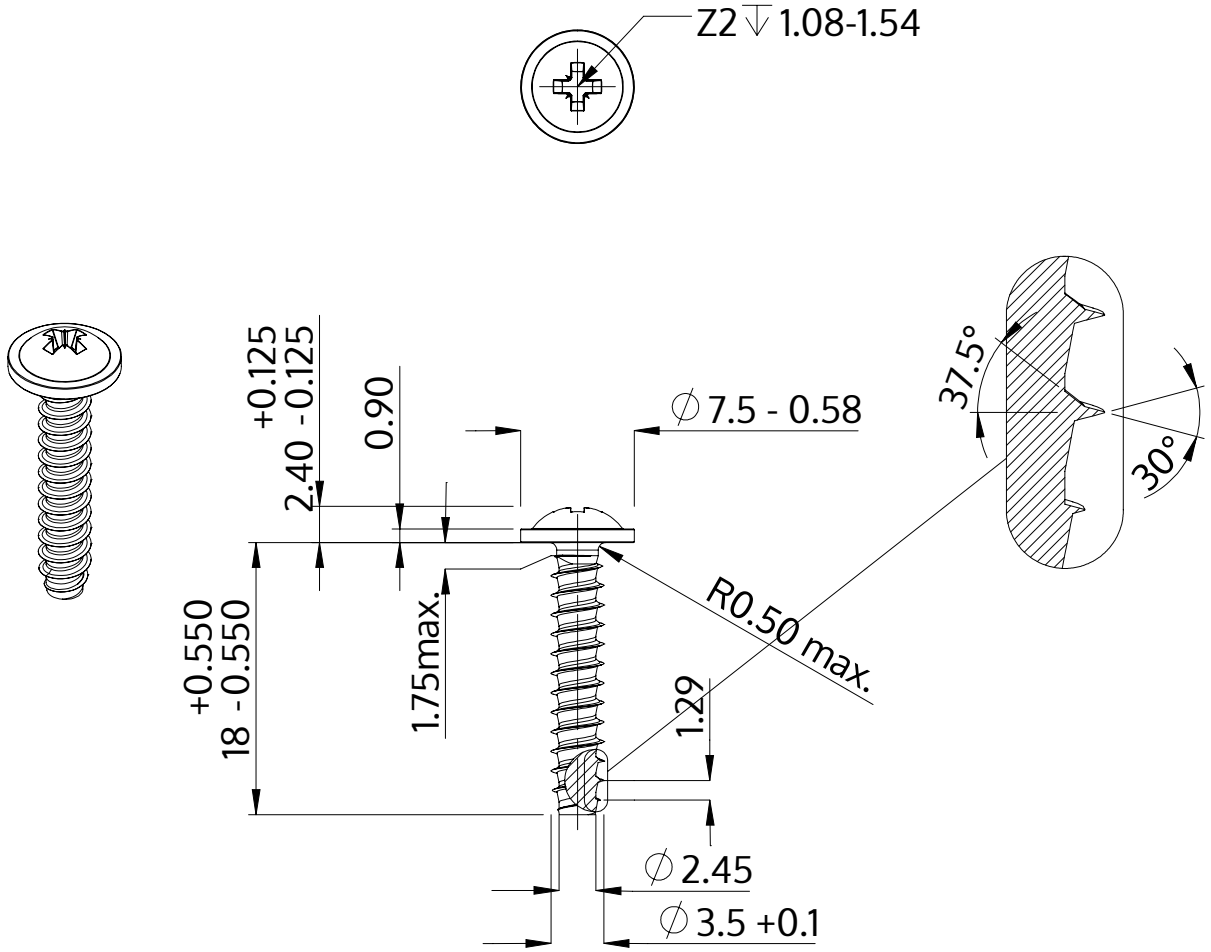

Description	STP21 3.5x18.0 - Z2
Material	stainless steel A4
Surface	bright, pickled and passivated
Weight	1.279 kg / 1000 pieces

SCREWERK	**STP210350180C**	
Metric Drawing A4	Scale None:1	2024-04