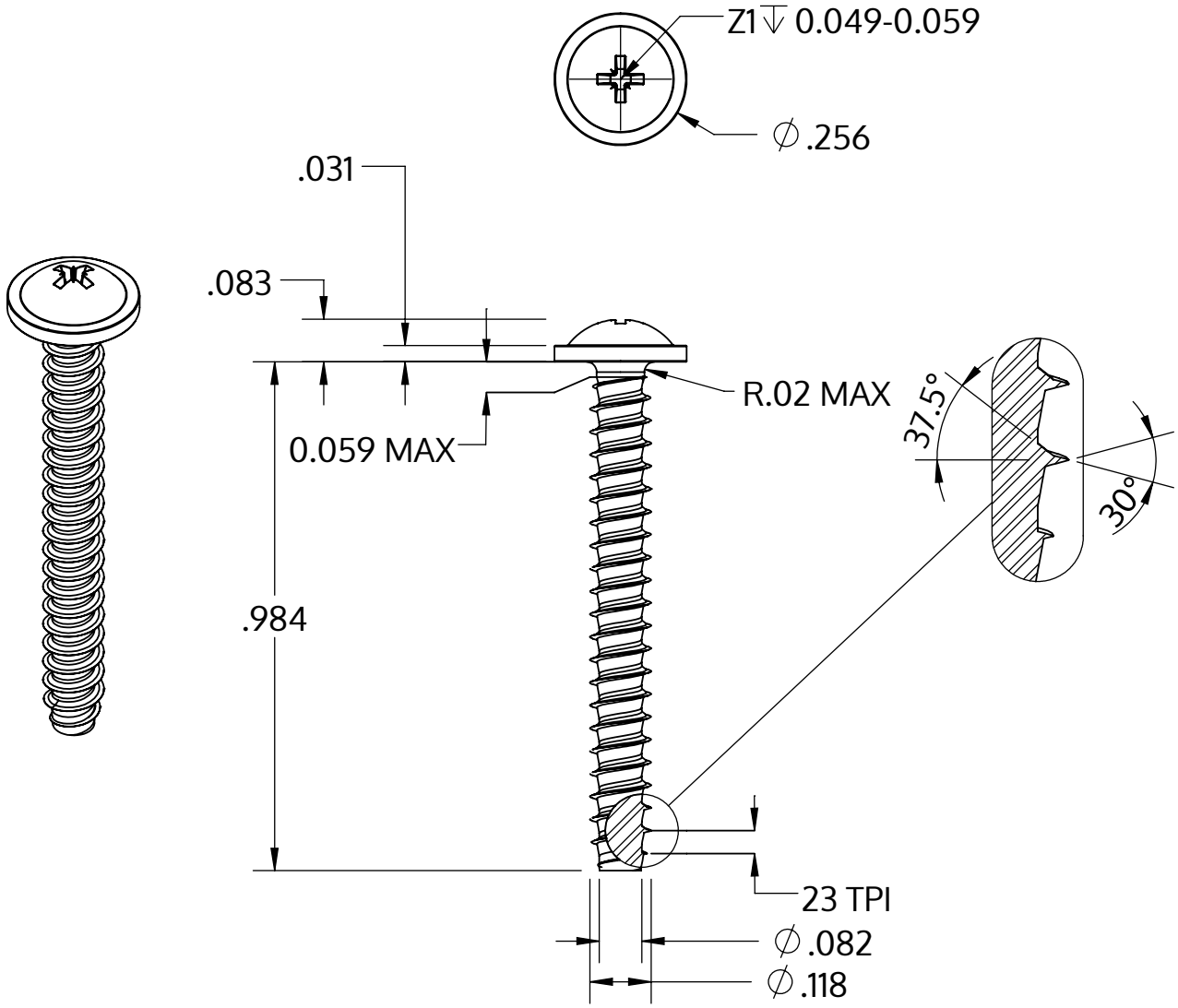

Metric size	M3 x 1.12 mm
US size (converted)	#4-23
	Tolerances [inch]
Length	+/- 0.025
Head diameter	+0 / -0.022
Head height	+/- 0.004
Thread diameter	+0.003 / -0

Description	STP21 3.0x25.0 - Z1
Material	steel, hardened
Surface	zinc-plated 5-7 µm, baked, blue / transparent passivated
Weight	1.126 kg / 1000 pieces

SCREWERK	**STP210300250S**	
Inch Drawing Size A	Scale 3:1	2024-10