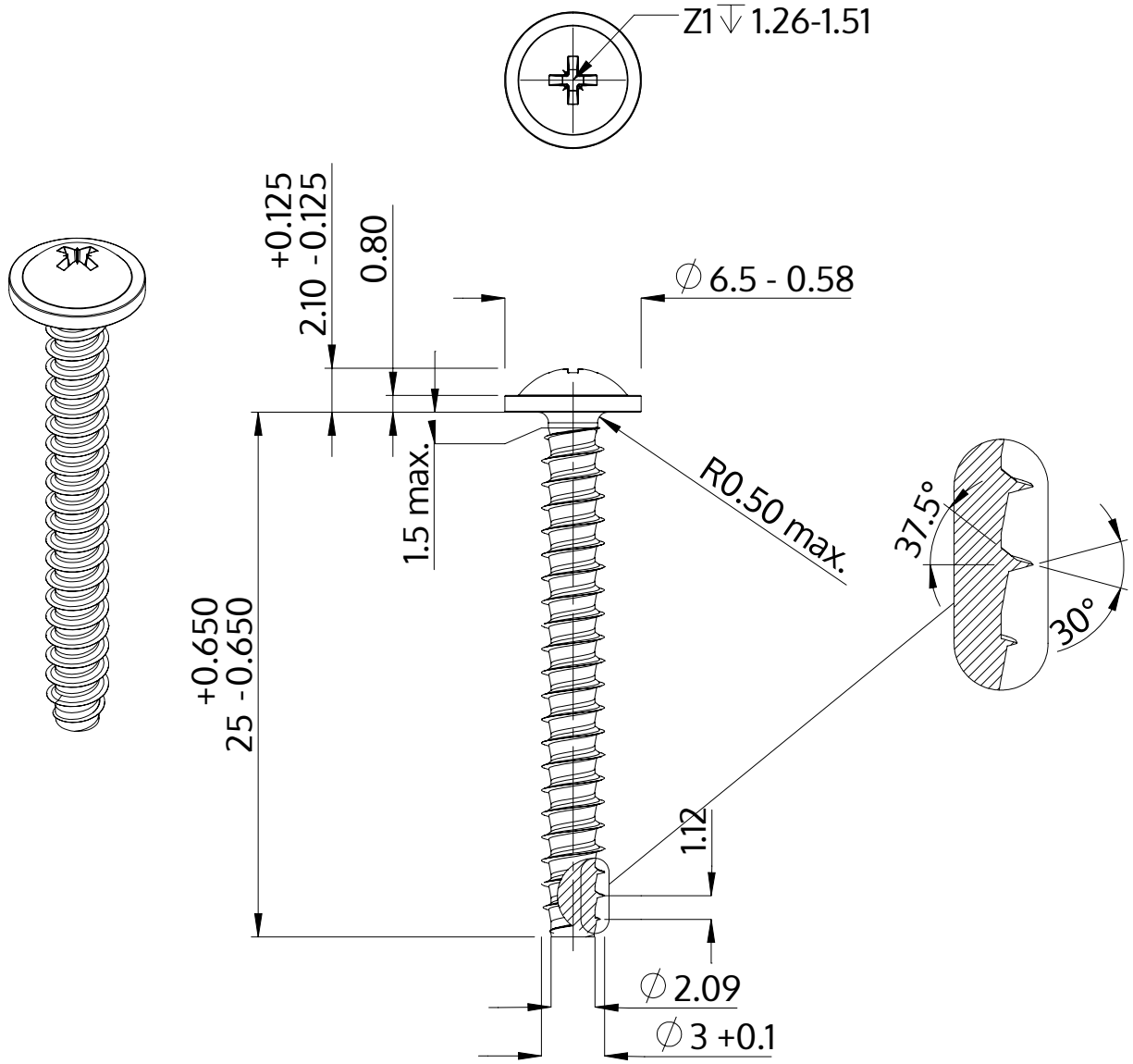

Description	STP21 3.0x25.0 - Z1
Material	steel, hardened
Surface	zinc-plated 5-7 µm, baked, blue / transparent passivated
Weight	1.126 kg / 1000 pieces

SCREWERK	**STP210300250S**	
Metric Drawing A4	Scale 3:1	2024-10