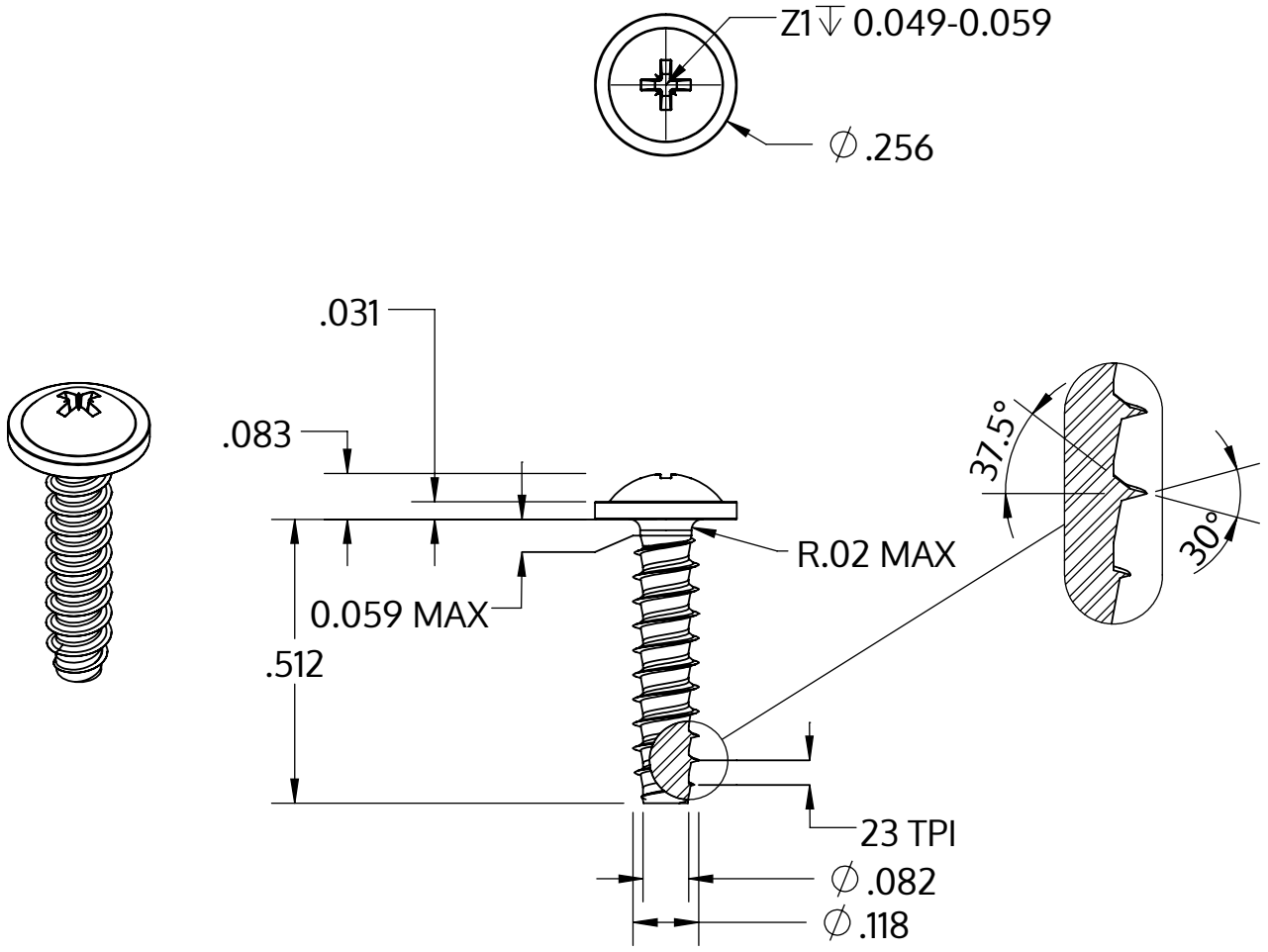


| | |
|---|---|
| Metric size | M3 x 1.12 mm |
| US size (converted) | #4-23 |
| | Tolerances [inch] |
| Length | +/- 0.021 |
| Head diameter | +0 / -0.022 |
| Head height | +/- 0.004 |
| Thread diameter | +0.003 / -0 |

| | |
|---|---|
| Descripción | STP21 3.0x13.0 - Z1 |
| Material | Acero Inoxidable A2 |
| Superficie | Laminado brillante, barnizado y pasivado |
| Peso | 0.718 kg / 1000 Piezas |

| | | |
|---|---|---|
| SCREWERK | **STP210300130E** | |
| _Zoll Zeichnung Größe A | Escalada None:1 | 2024-04 |