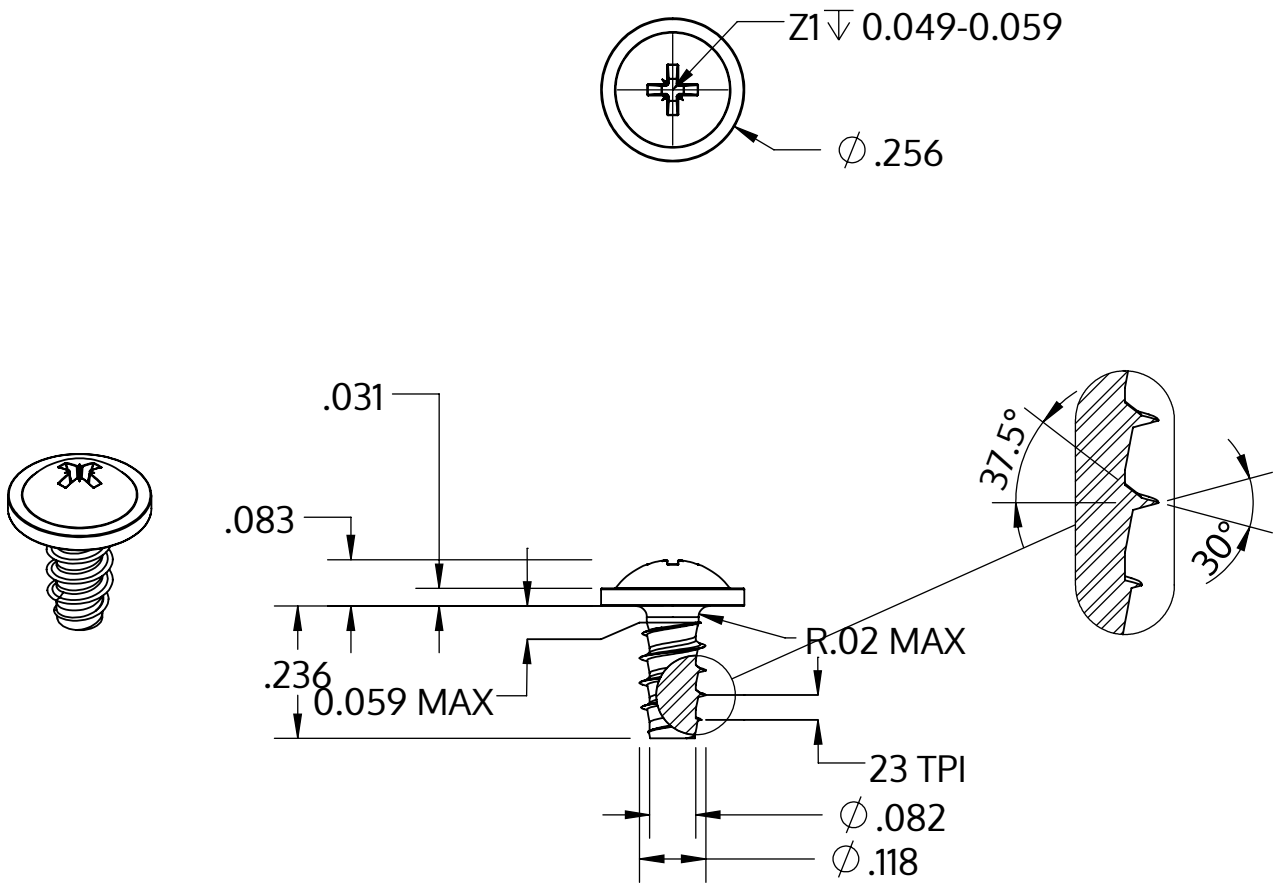

Metric size	M3 x 1.12 mm
US size (converted)	#4-23
	Tolerances [inch]
Length	+/- 0.014
Head diameter	+0 / -0.022
Head height	+/- 0.004
Thread diameter	+0.003 / -0

Descriere	STP21 3.0x6.0 - Z1
Material	oțel, călit
Exterior	zincat 5-7 µm, recopt, pasivat transparent/albastru
Greutate	0.480 kg / 1000 unități

SCREWERK	**STP210300060S**	
_Zoll Zeichnung Größe A	Scalarea None:1	2024-04