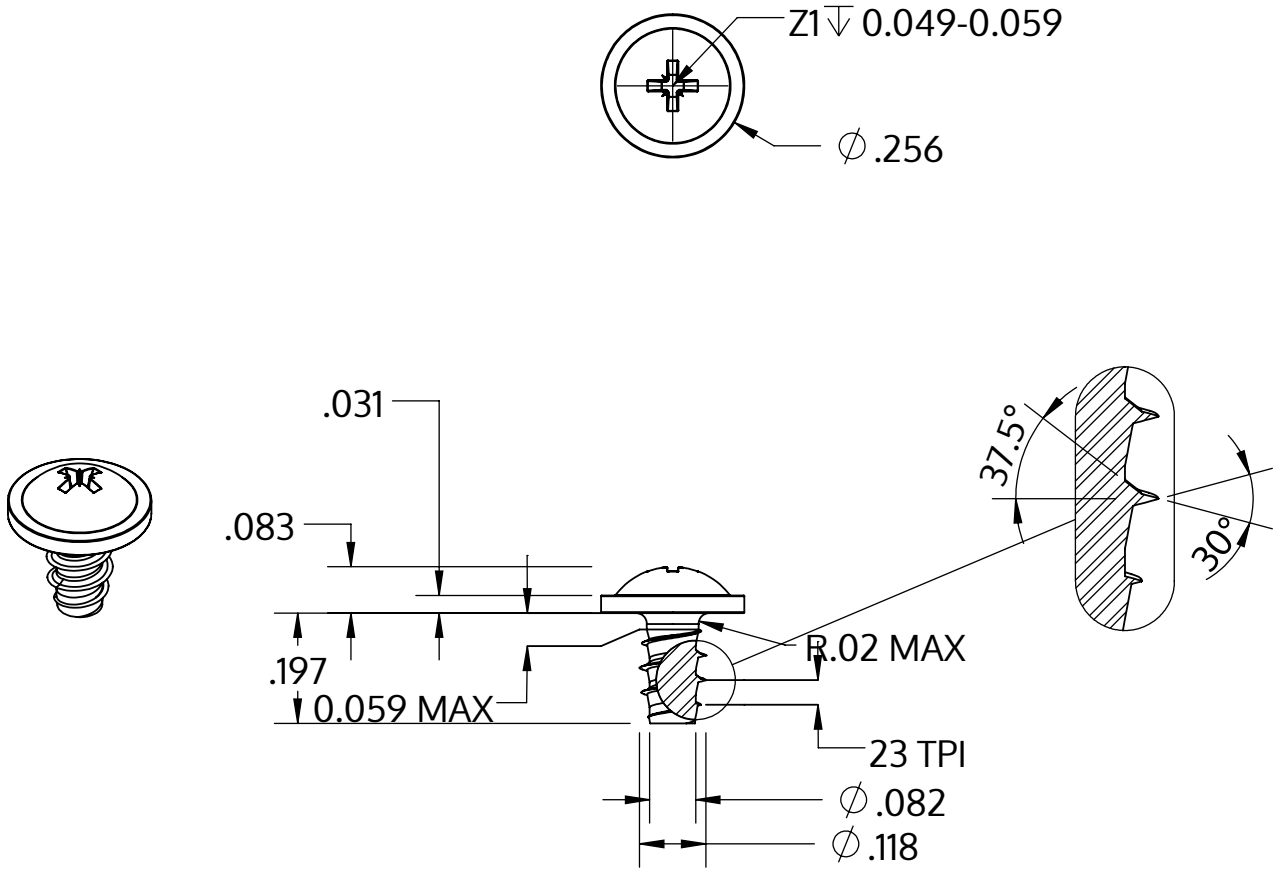

Metric size	M3 x 1.12 mm
US size (converted)	#4-23
	Tolerances [inch]
Length	+/- 0.014
Head diameter	+0 / -0.022
Head height	+/- 0.004
Thread diameter	+0.003 / -0

Description	STP21 3.0x5.0 - Z1
Material	stainless-steel A2
Surface	bright, pickled and passivated
Weight	0.446 kg / 1000 pieces

SCREWERK	**STP210300050E**	
Inch Drawing Size A	Scale 3:1	2024-10