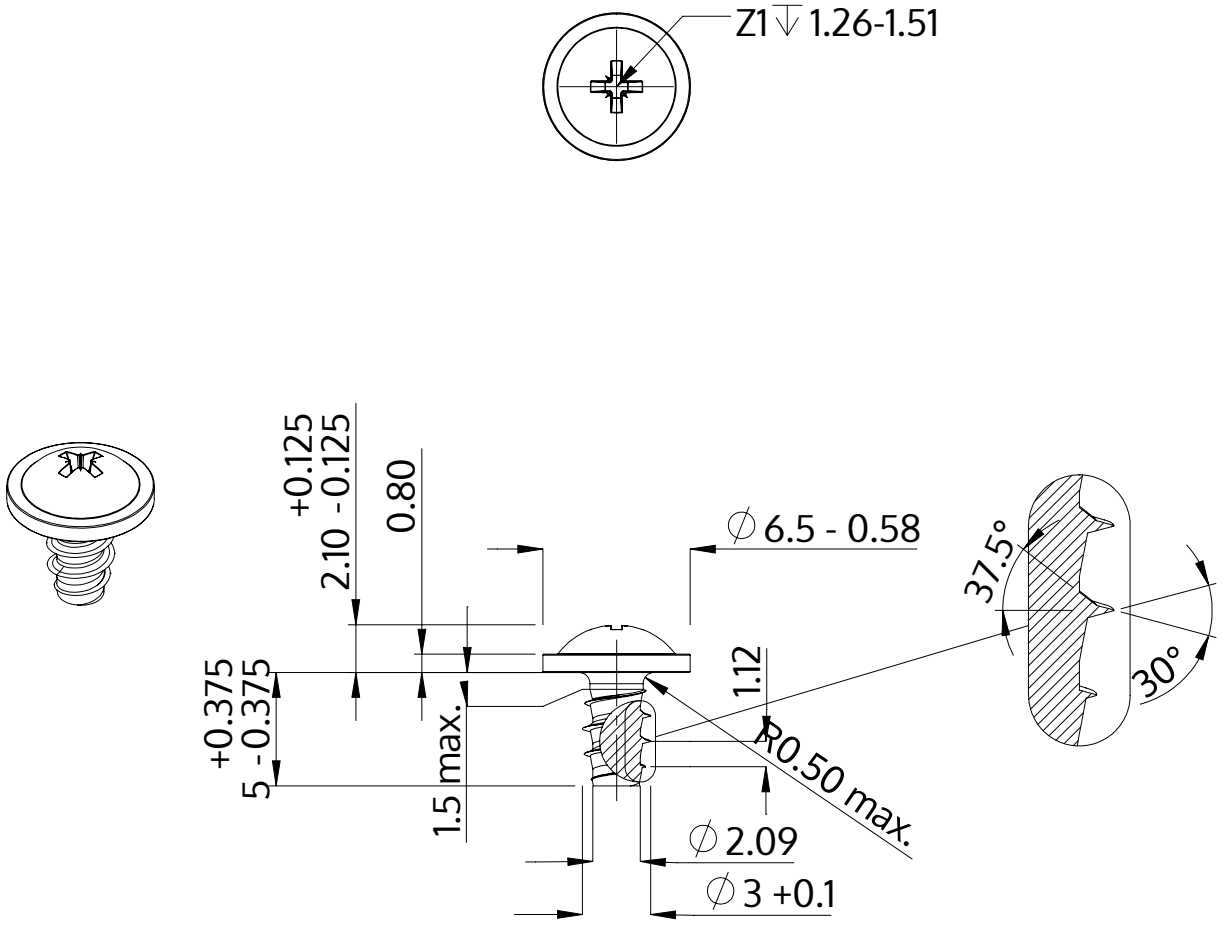

Description	STP21 3.0x5.0 - Z1
Material	stainless-steel A2
Surface	bright, pickled and passivated
Weight	0.446 kg / 1000 pieces

SCREWERK	**STP210300050E**	
Metric Drawing A4	Scale 3:1	2024-10