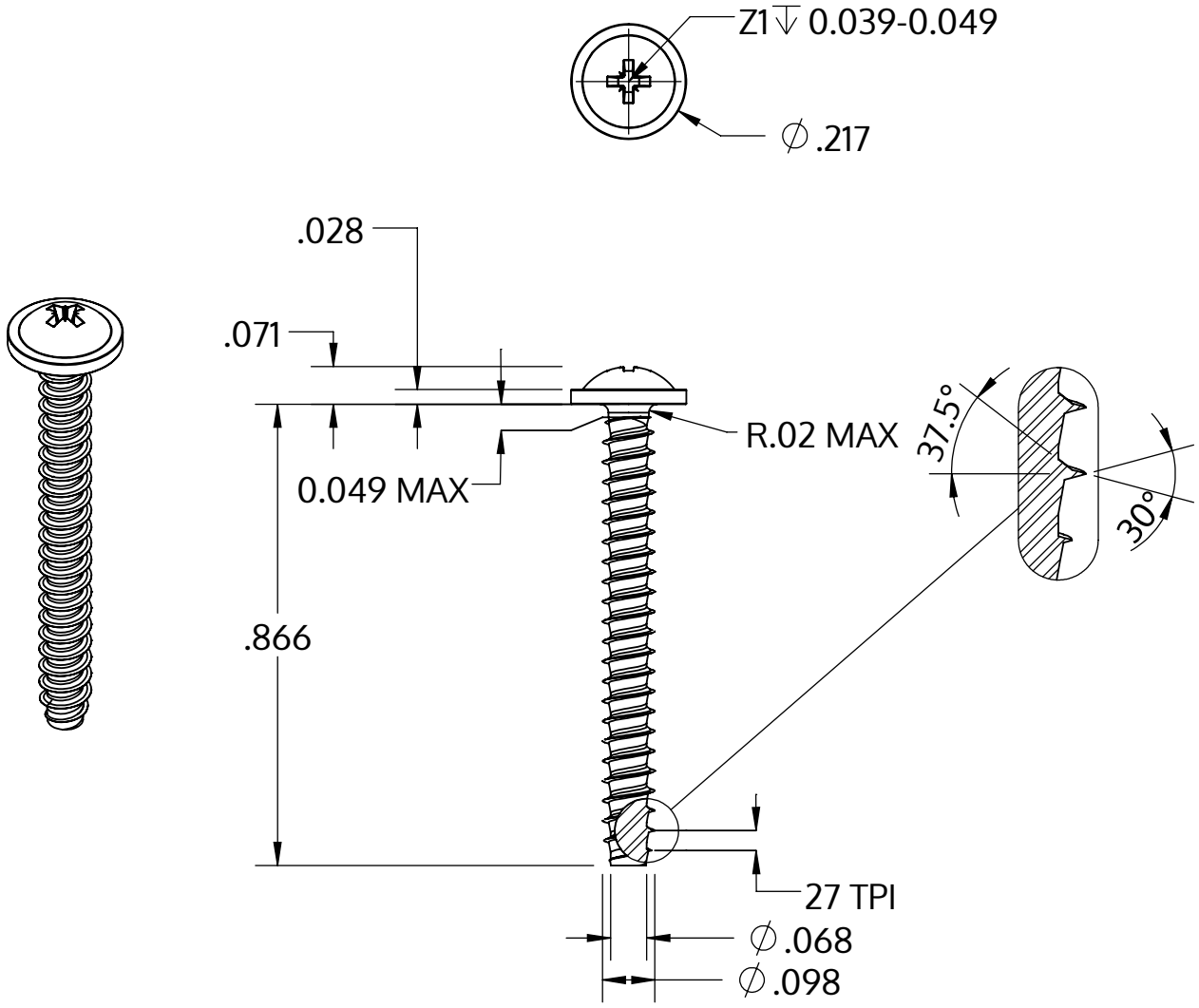

Metric size	M2.5 x 0.95 mm
US size (converted)	#3-27
	Tolerances [inch]
Length	+/- 0.025
Head diameter	+0 / -0.018
Head height	+/- 0.004
Thread diameter	+0.003 / -0

Description	STP21 2.5x22.0 - Z1
Material	steel, hardened
Surface	zinc-plated 5-7 µm, baked, blue / transparent passivated
Weight	0.701 kg / 1000 pieces

SCREWERK	**STP210250220S**	
Inch Drawing Size A	Scale 3:1	2024-10