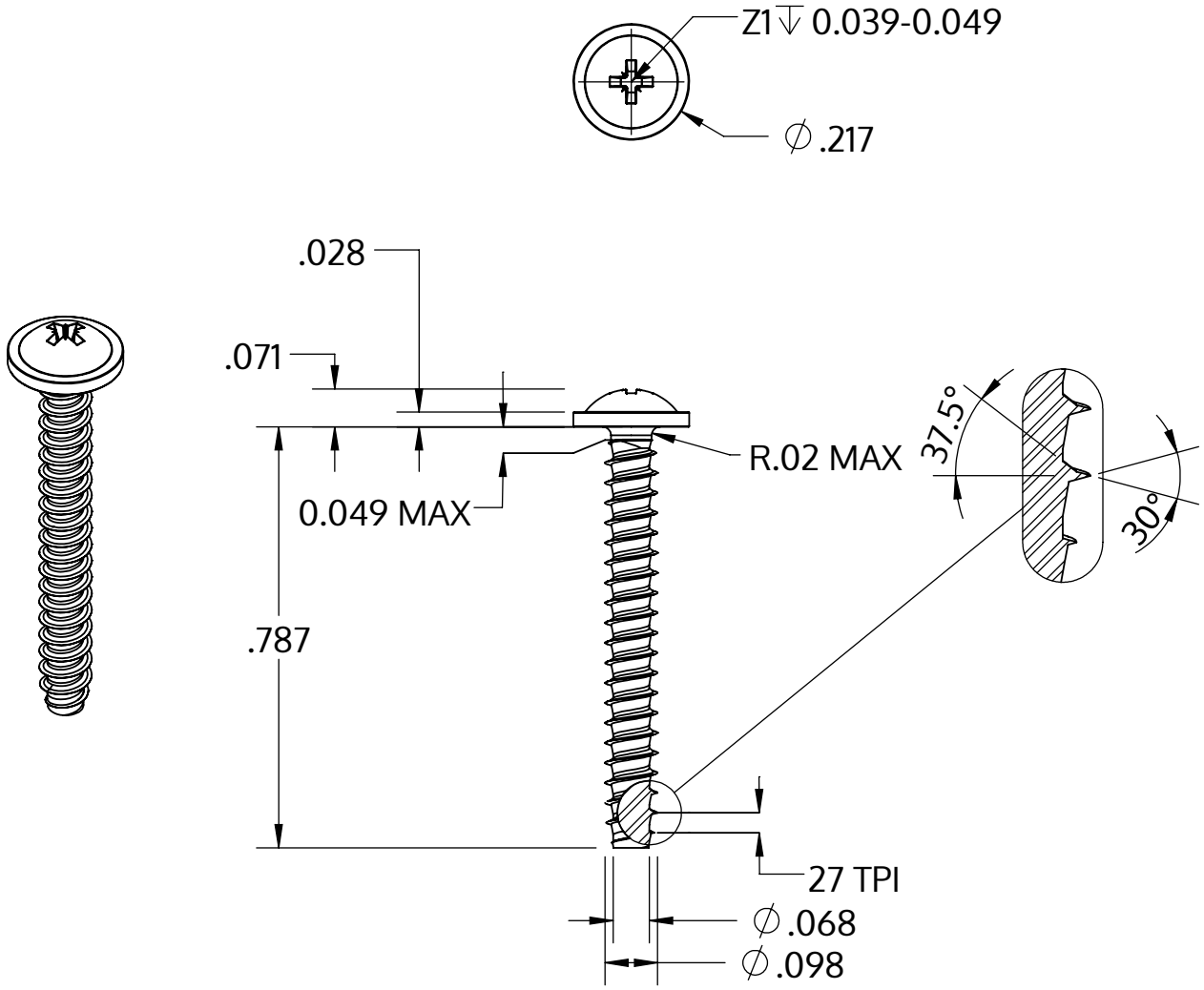

Metric size	M2.5 x 0.95 mm
US size (converted)	#3-27
	Tolerances [inch]
Length	+/- 0.025
Head diameter	+0 / -0.018
Head height	+/- 0.004
Thread diameter	+0.003 / -0

Description	STP21 2.5x20.0 - Z1
Matière	acier inoxydable A2
Surface	brillant décapé et passivé
Poids	0.653 kg / 1000 Unité

SCREWERK	**STP210250200E**	
_Zoll Zeichnung Größe A	Redimensionner 3:1	2024-10