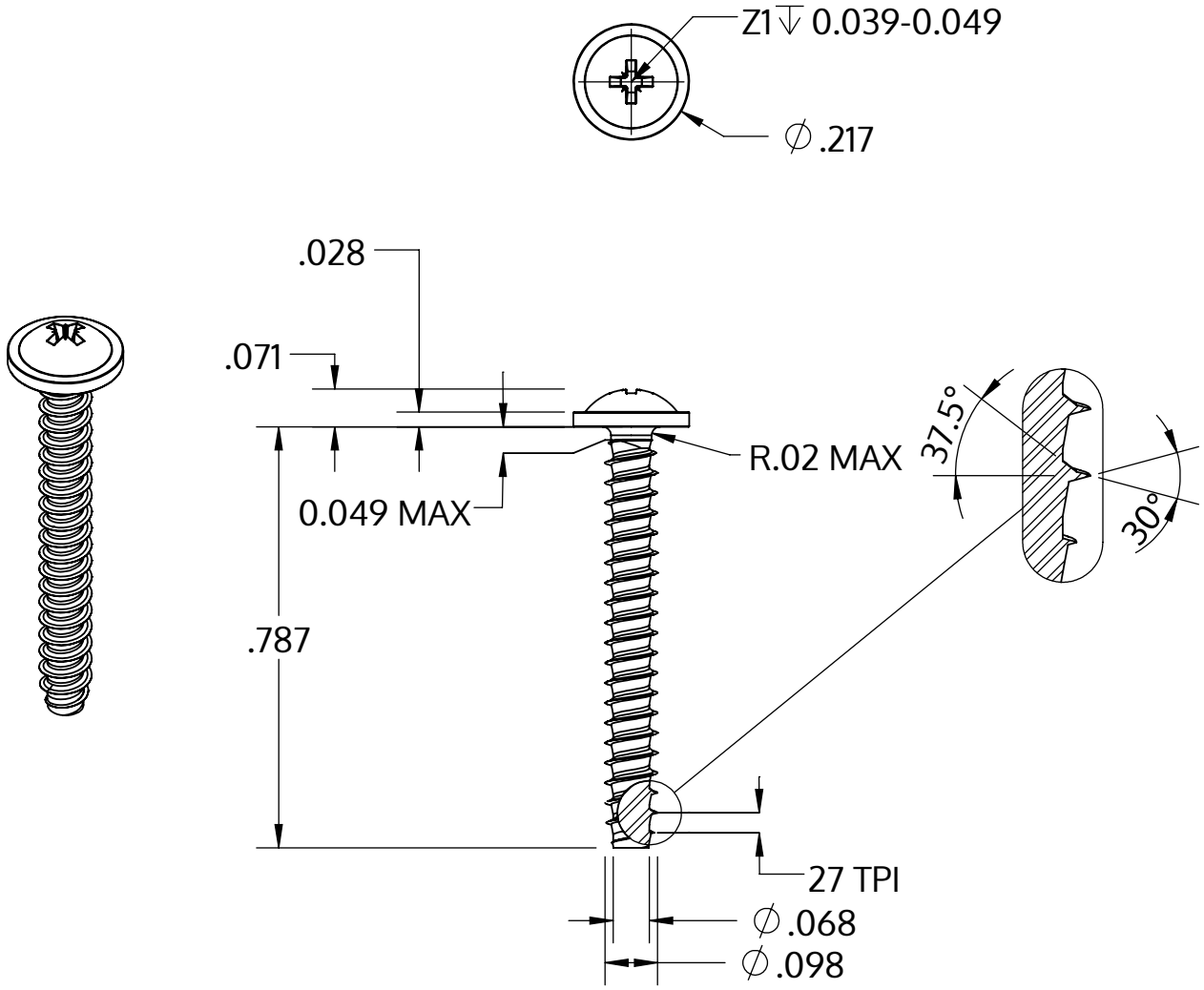


| | |
|---|---|
| Metric size | M2.5 x 0.95 mm |
| US size (converted) | #3-27 |
| | Tolerances [inch] |
| Length | +/- 0.025 |
| Head diameter | +0 / -0.018 |
| Head height | +/- 0.004 |
| Thread diameter | +0.003 / -0 |

| | |
|---|---|
| Descripción | STP21 2.5x20.0 - Z1 |
| Material | Acero Inoxidable |
| Superficie | Laminado brillante, barnizado y pasivado |
| Peso | 0.653 kg / 1000 Piezas |

| | | |
|---|---|---|
| SCREWERK | **STP210250200C** | |
| _Zoll Zeichnung Größe A | Escalada 3:1 | 2024-10 |