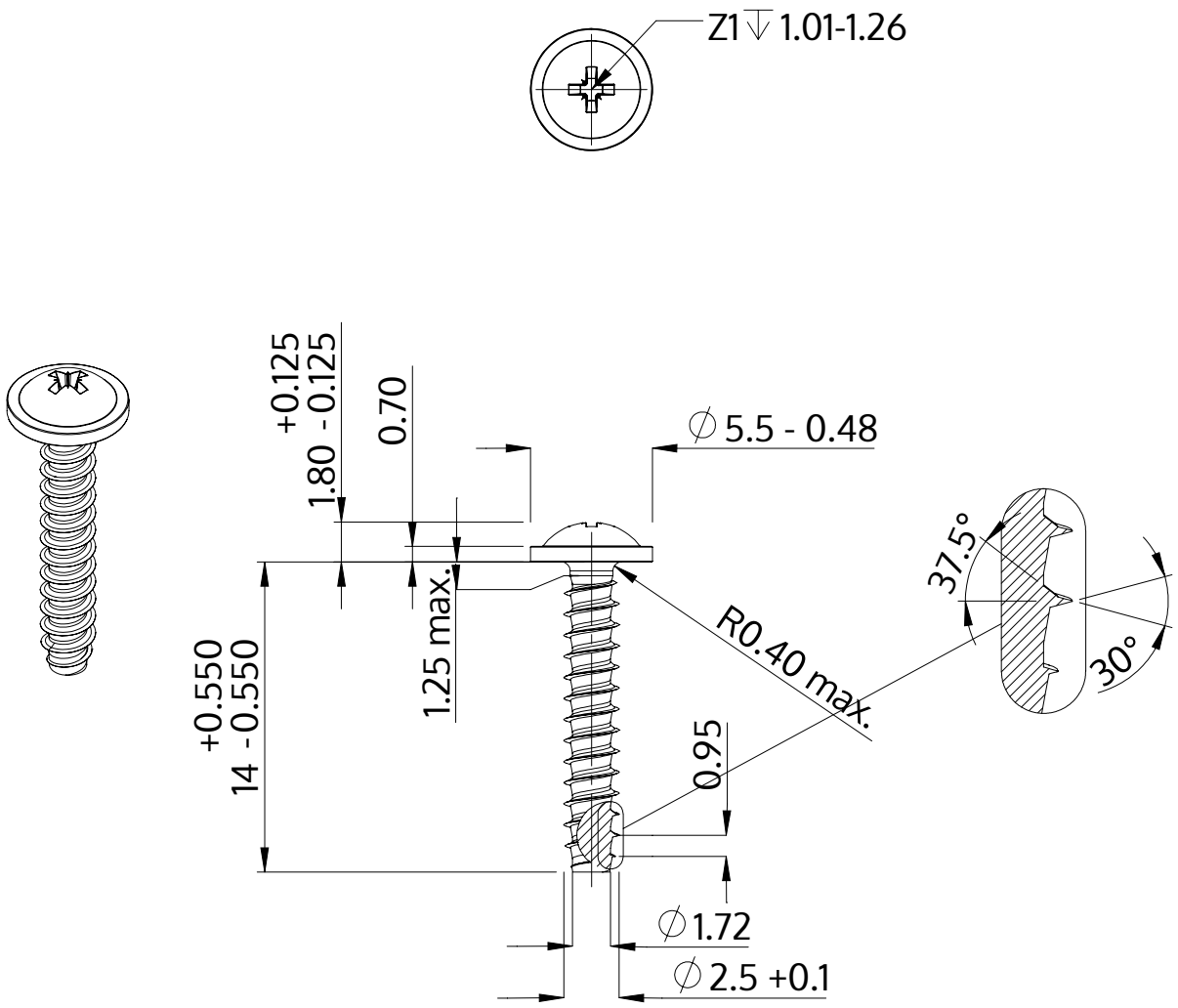


| | |
|---|---|
| Description | STP21 2.5x14.0 - Z1 |
| Material | stainless steel A4 |
| Surface | bright, pickled and passivated |
| Weight | 0.508 kg / 1000 pieces |

| | | |
|---|---|---|
| SCREWERK | **STP210250140C** | |
| Metric Drawing A4 | Scale None:1 | 2024-04 |