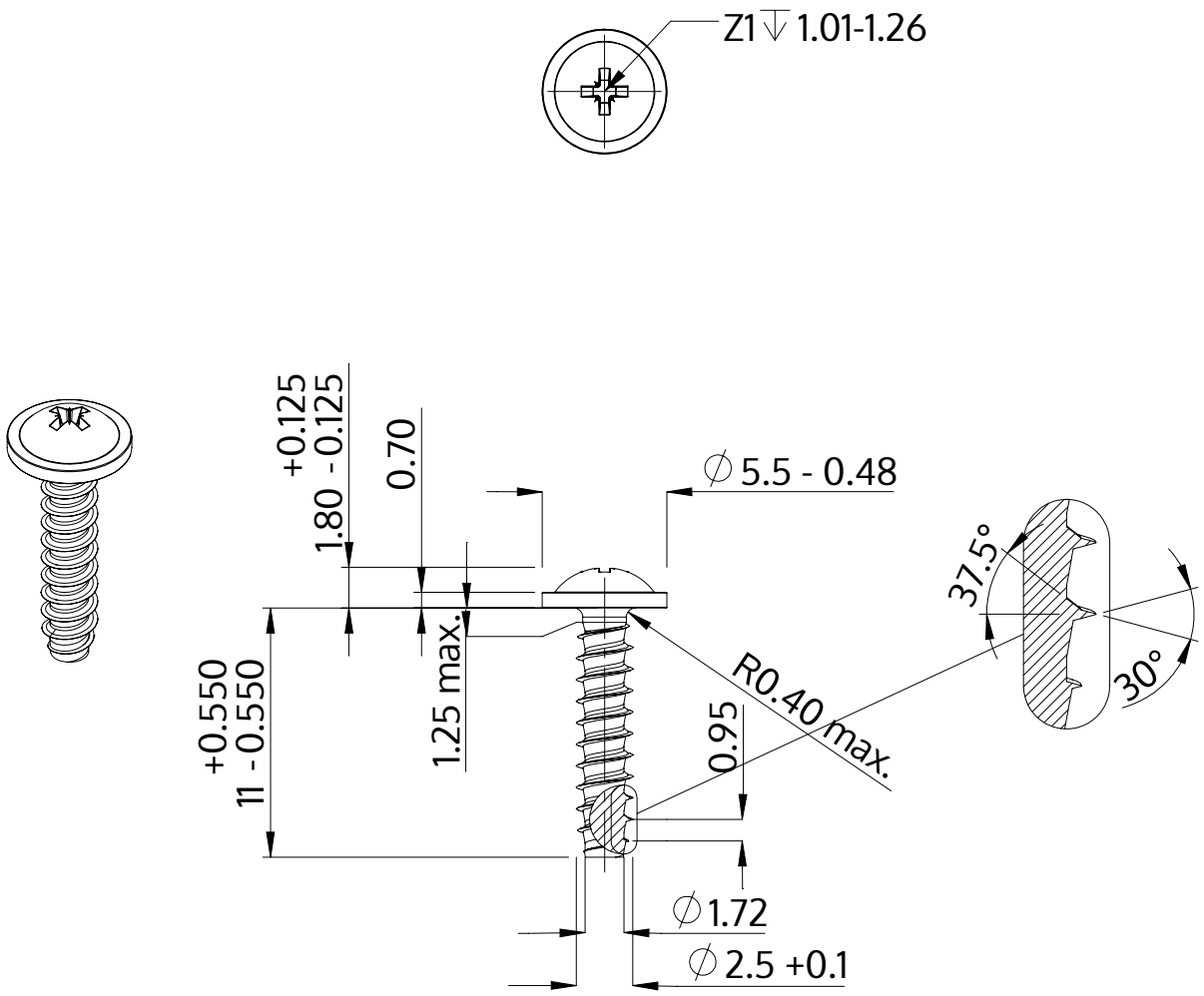

Description	STP21 2.5x11.0 - Z1
Material	stainless-steel A2
Surface	bright, pickled and passivated
Weight	0.436 kg / 1000 pieces

SCREWERK	**STP210250110E**	
Metric Drawing A4	Scale 3:1	2024-10