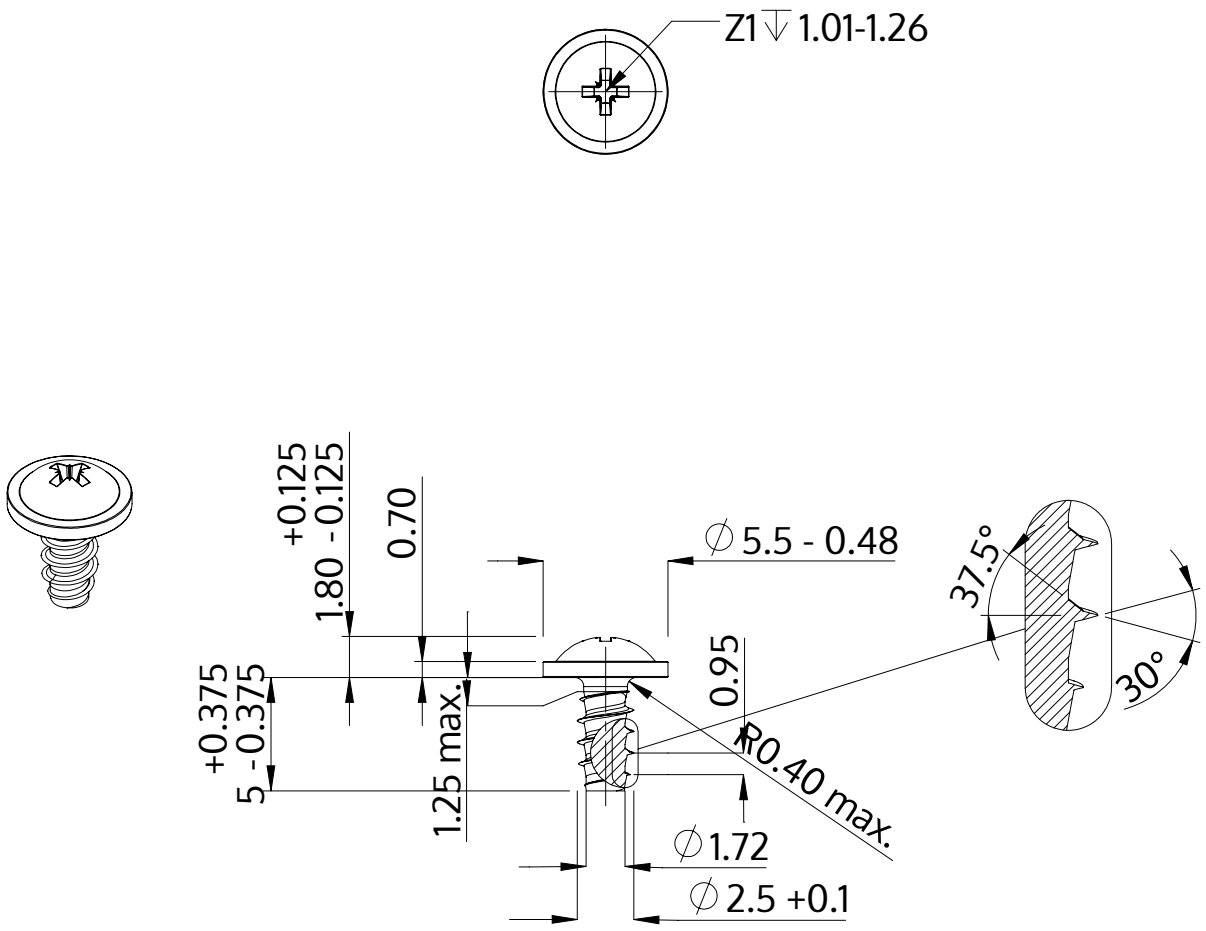

Description	STP21 2.5x5.0 - Z1
Material	steel, hardened
Surface	zinc-plated 5-7 µm, baked, blue / transparent passivated
Weight	0.292 kg / 1000 pieces

SCREWERK	**STP210250050S**	
Metric Drawing A4	Scale None:1	2024-04