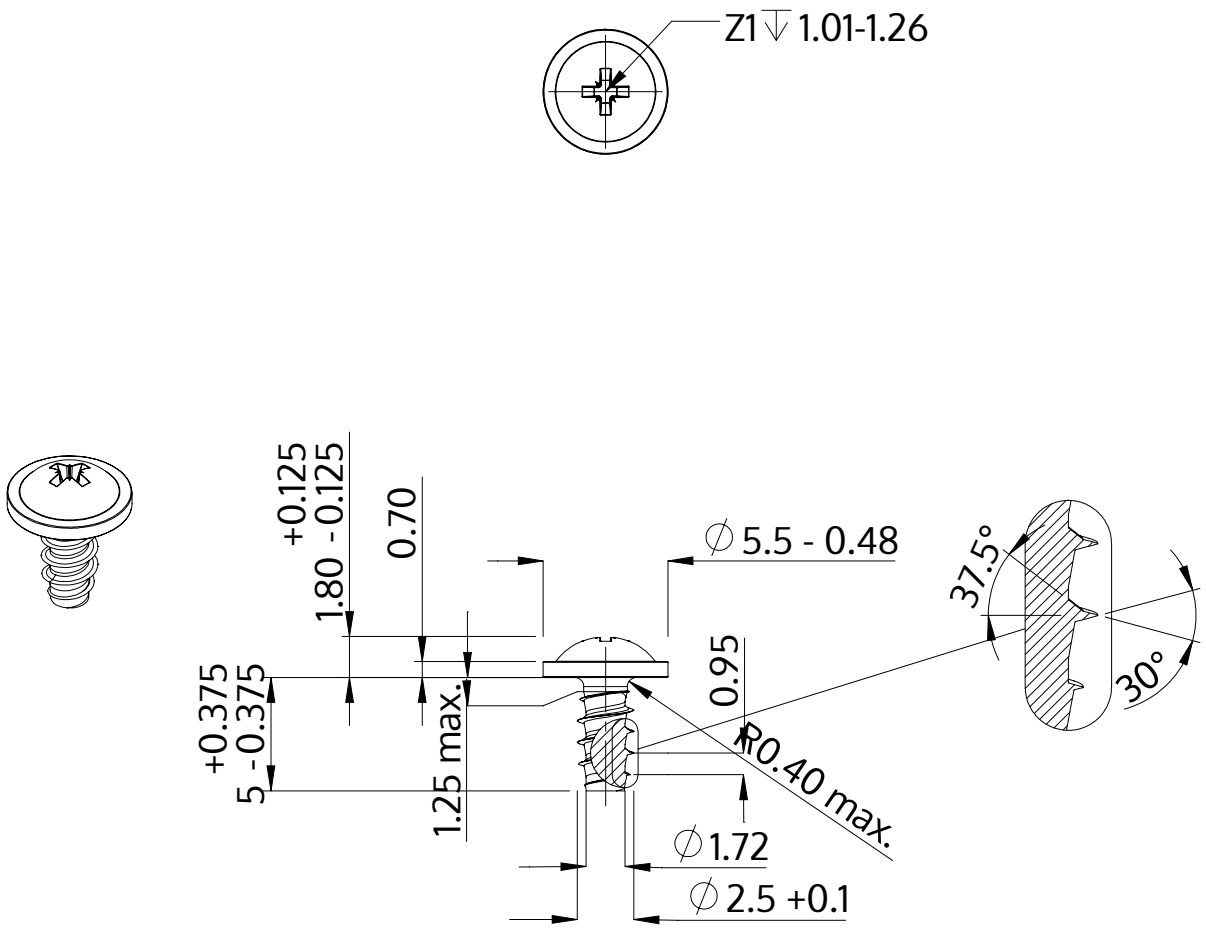

Description	STP21 2.5x5.0 - Z1
Material	stainless steel A4
Surface	bright, pickled and passivated
Weight	0.292 kg / 1000 pieces

SCREWERK	**STP210250050C**	
Metric Drawing A4	Scale None:1	2024-04