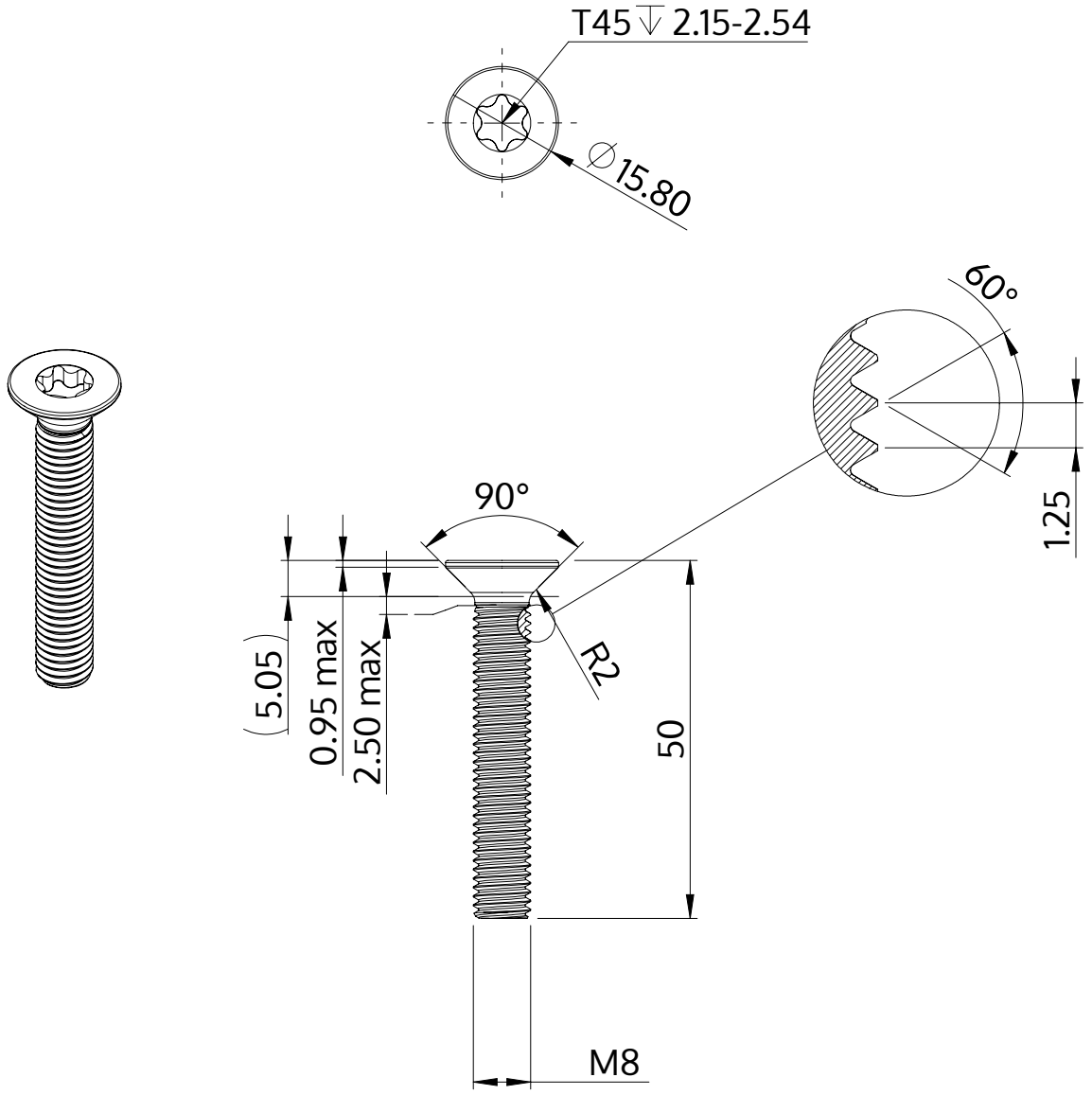

Description	STM41 8.0x50.0 - T45
Material	steel, hardened
Surface	Zinc-Nickel-plated min. 5µm, passivated black/ Cr-VI-free, baked, sealed
Weight	16.993 kg / 1000 pieces

SCREWERK	**STM410800500B**	
Metric Drawing A4	Scale 1:1	2024-10