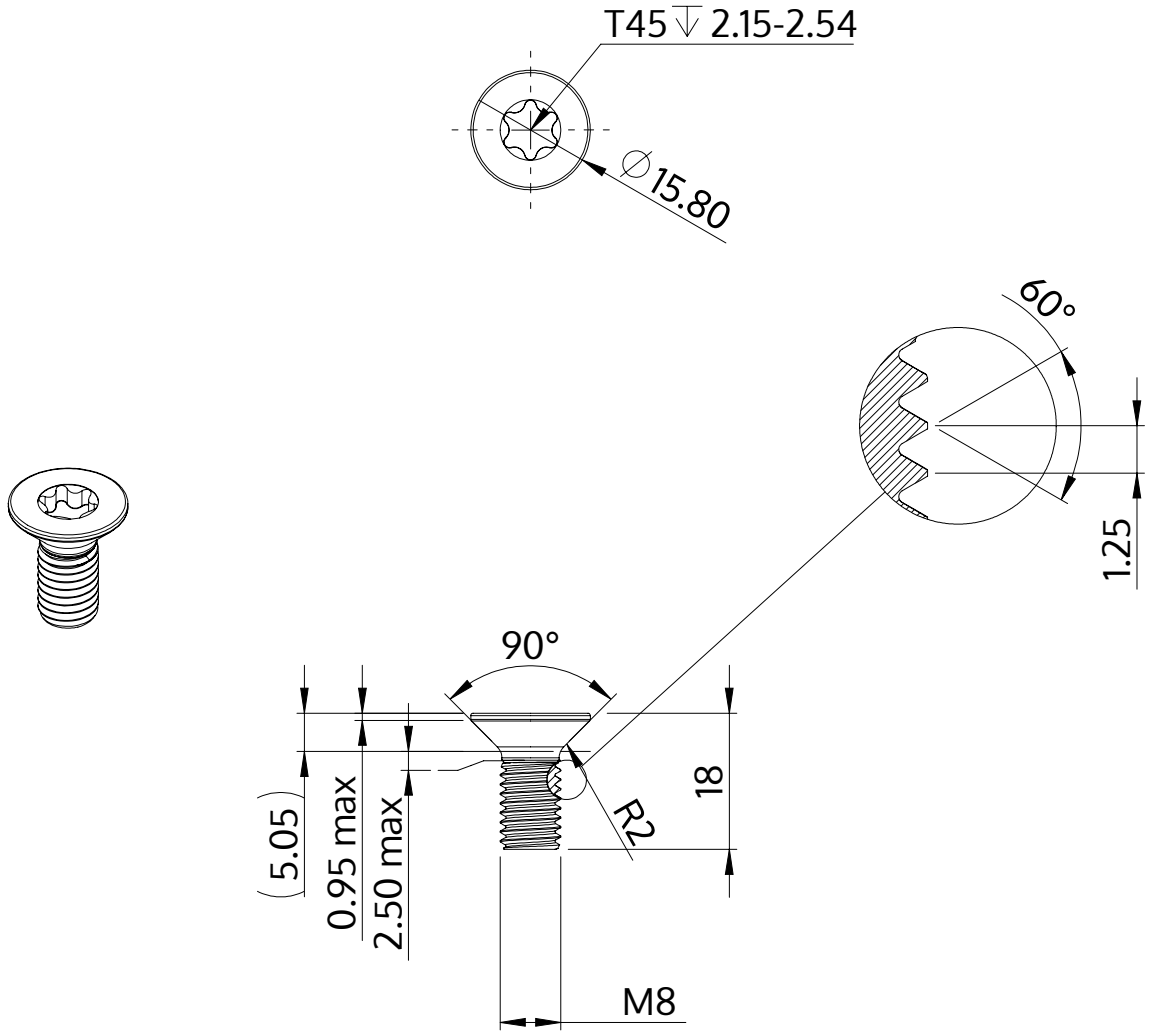

Description	STM41 8.0x18.0 - T45
Material	steel, hardened
Surface	zinc-plated 5-7 µm, baked, blue / transparent passivated
Weight	7.233 kg / 1000 pieces

SCREWERK	**STM410800180S**	
Metric Drawing A4	Scale 1:1	2024-10