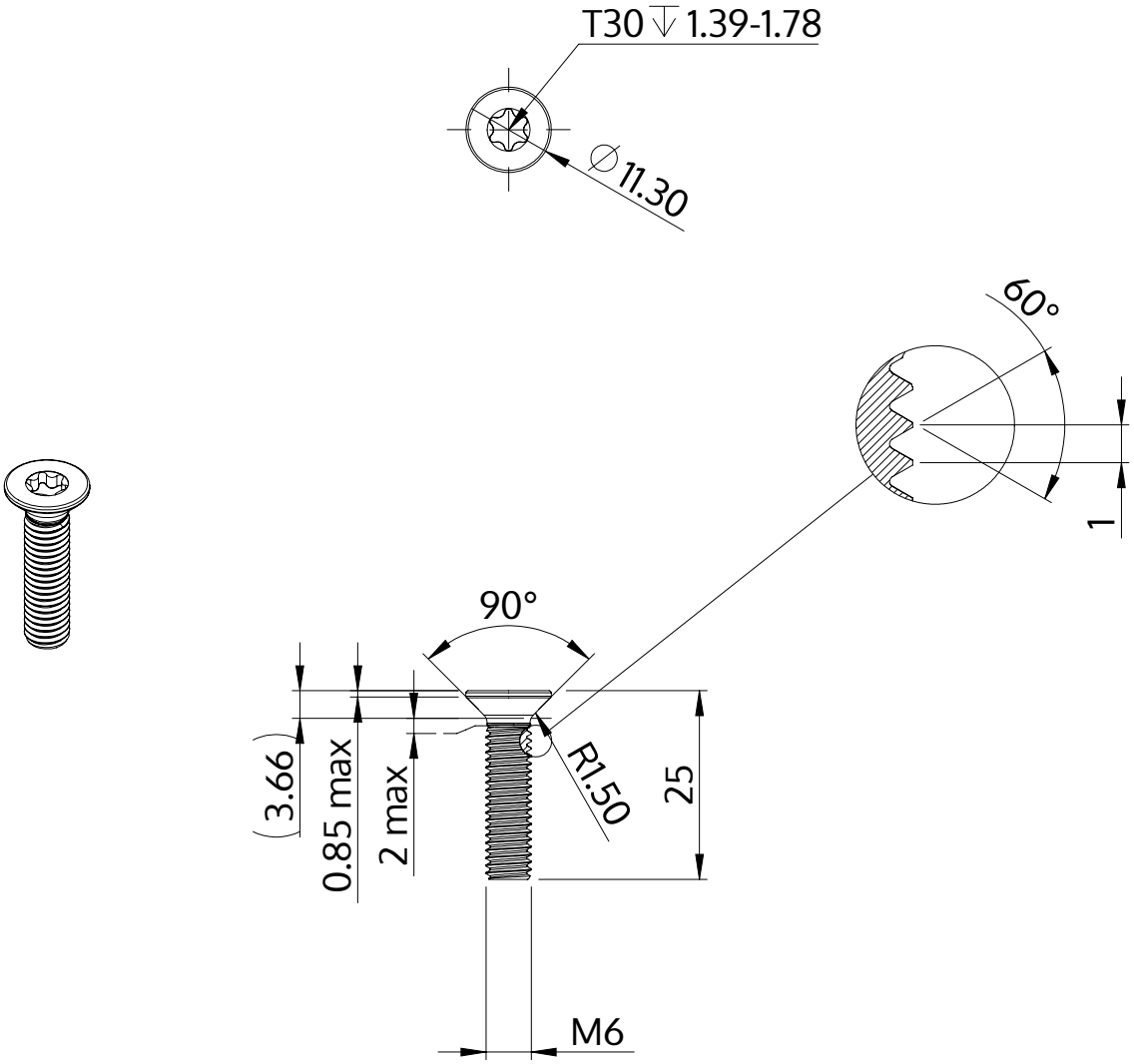

Description	STM41 6.0x25.0 - T30
Material	stainless-steel A2
Surface	bright, pickled and passivated
Weight	4.954 kg / 1000 pieces

SCREWERK	**STM410600250E**	
Metric Drawing A4	Scale 1:1	2024-10