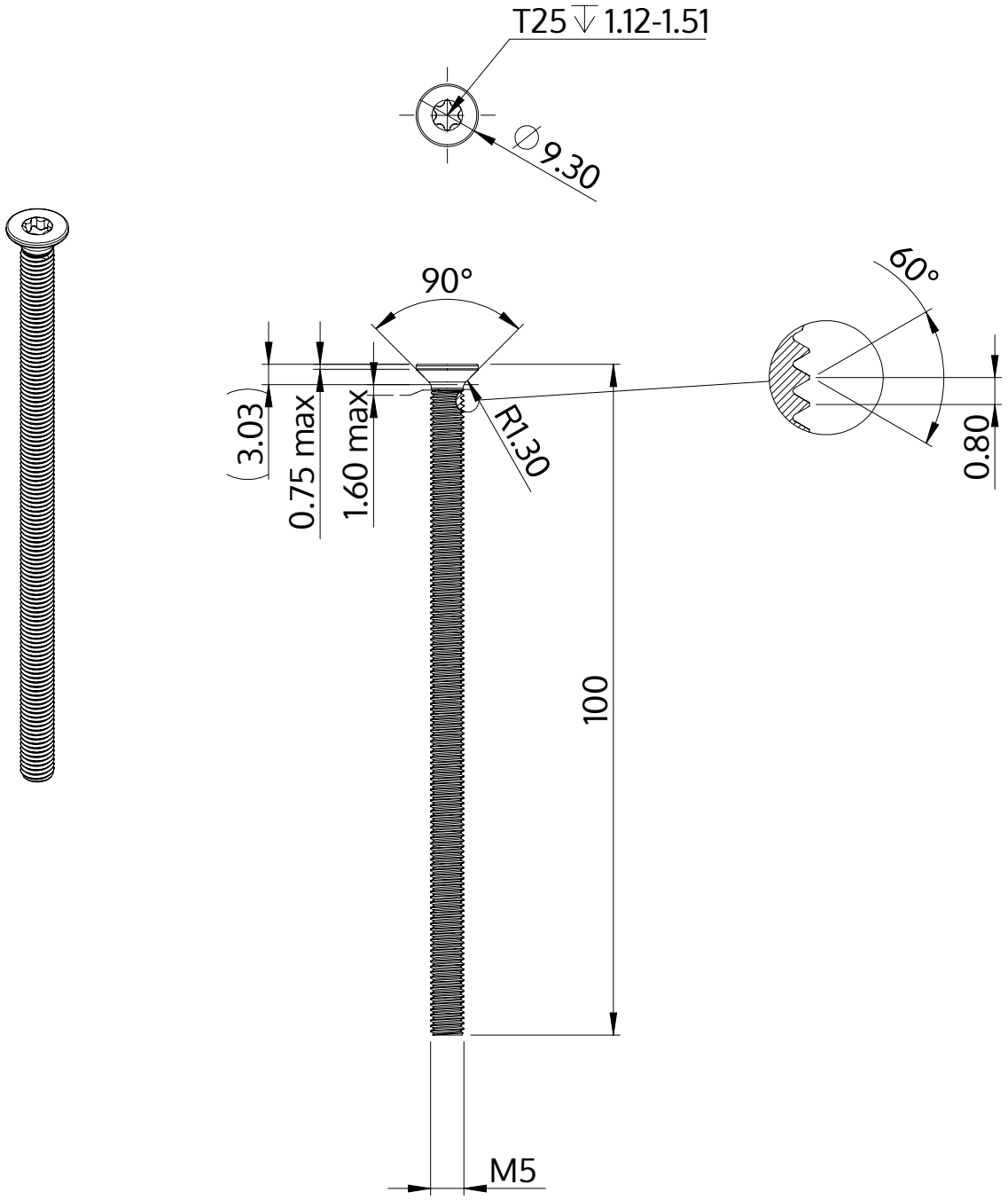

Description	STM41 5.0x100.0 - T25
Material	steel, hardened
Surface	zinc-plated 5-7 µm, baked, blue / transparent passivated
Weight	12.411 kg / 1000 pieces

SCREWERK	**STM410501000S**	
Metric Drawing A4	Scale 2:1	2024-10