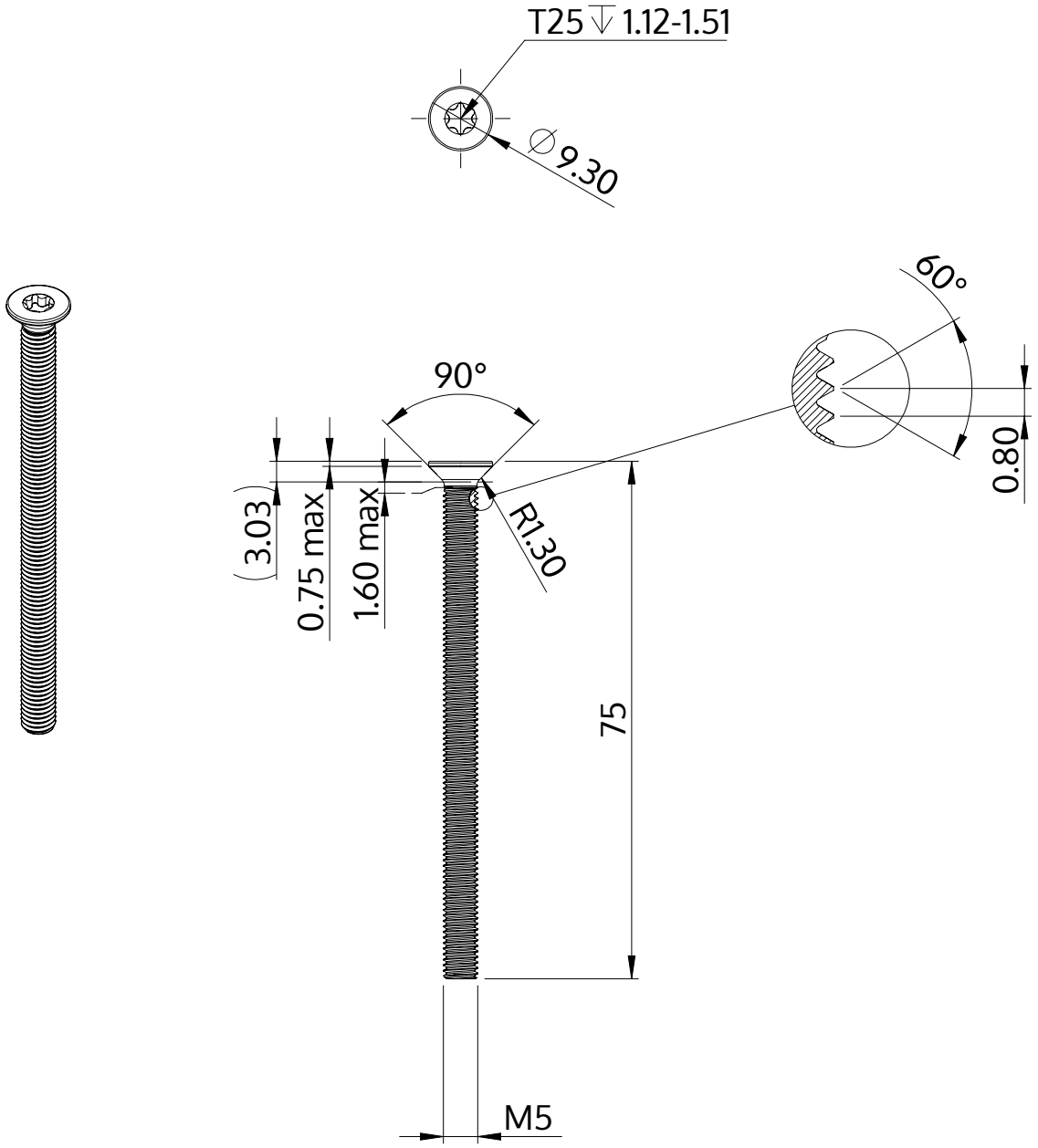

Description	STM41 5.0x75.0 - T25
Material	stainless-steel A2
Surface	bright, pickled and passivated
Weight	9.418 kg / 1000 pieces

SCREWERK	**STM410500750E**	
Metric Drawing A4	Scale 2:1	2024-10