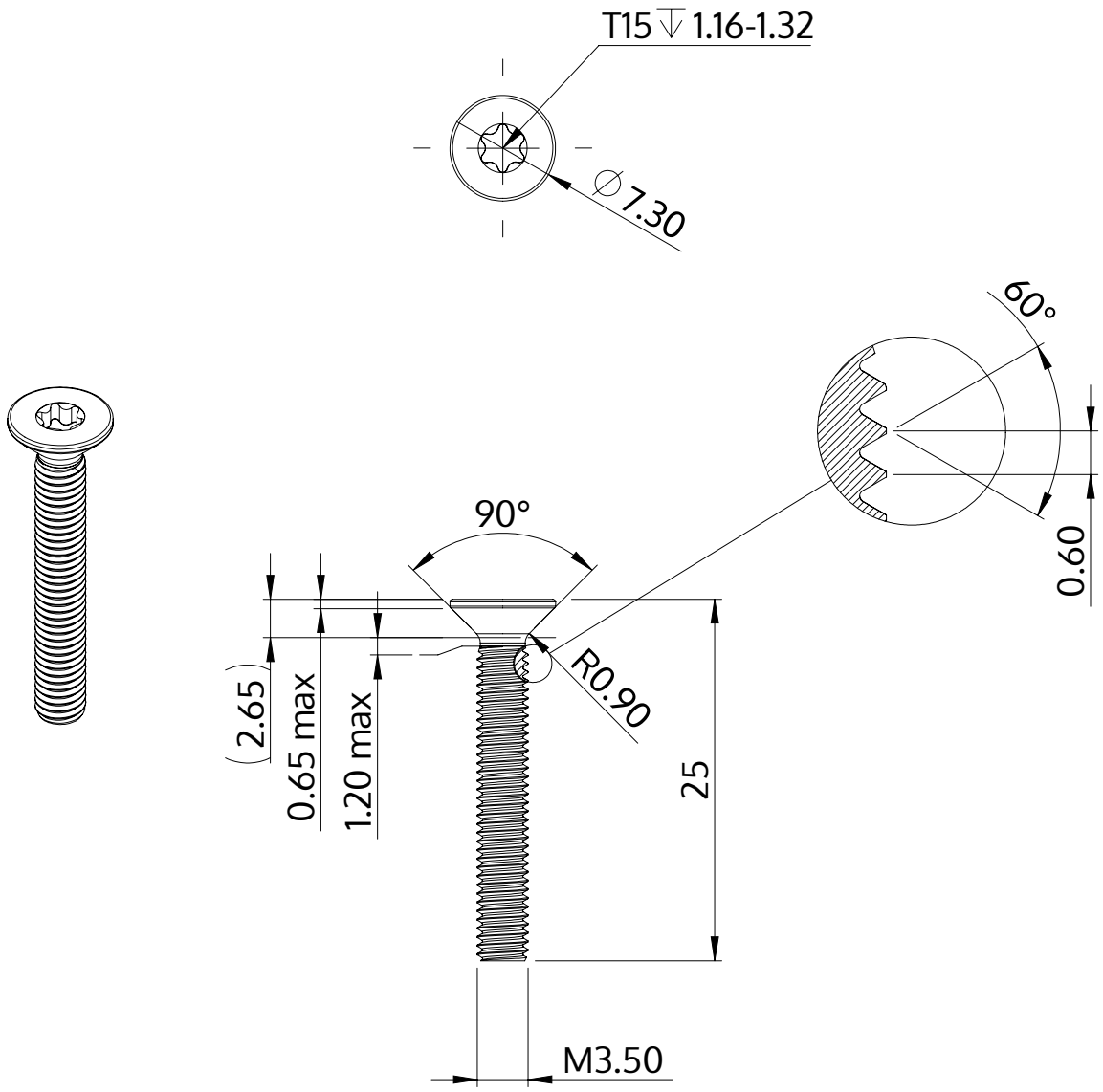

Description	STM41 3.5x25.0 - T15
Material	steel, hardened
Surface	zinc-plated 5-7 µm, baked, blue / transparent passivated
Weight	1.687 kg / 1000 pieces

SCREWERK	**STM410350250S**	
Metric Drawing A4	Scale None:1	2024-04