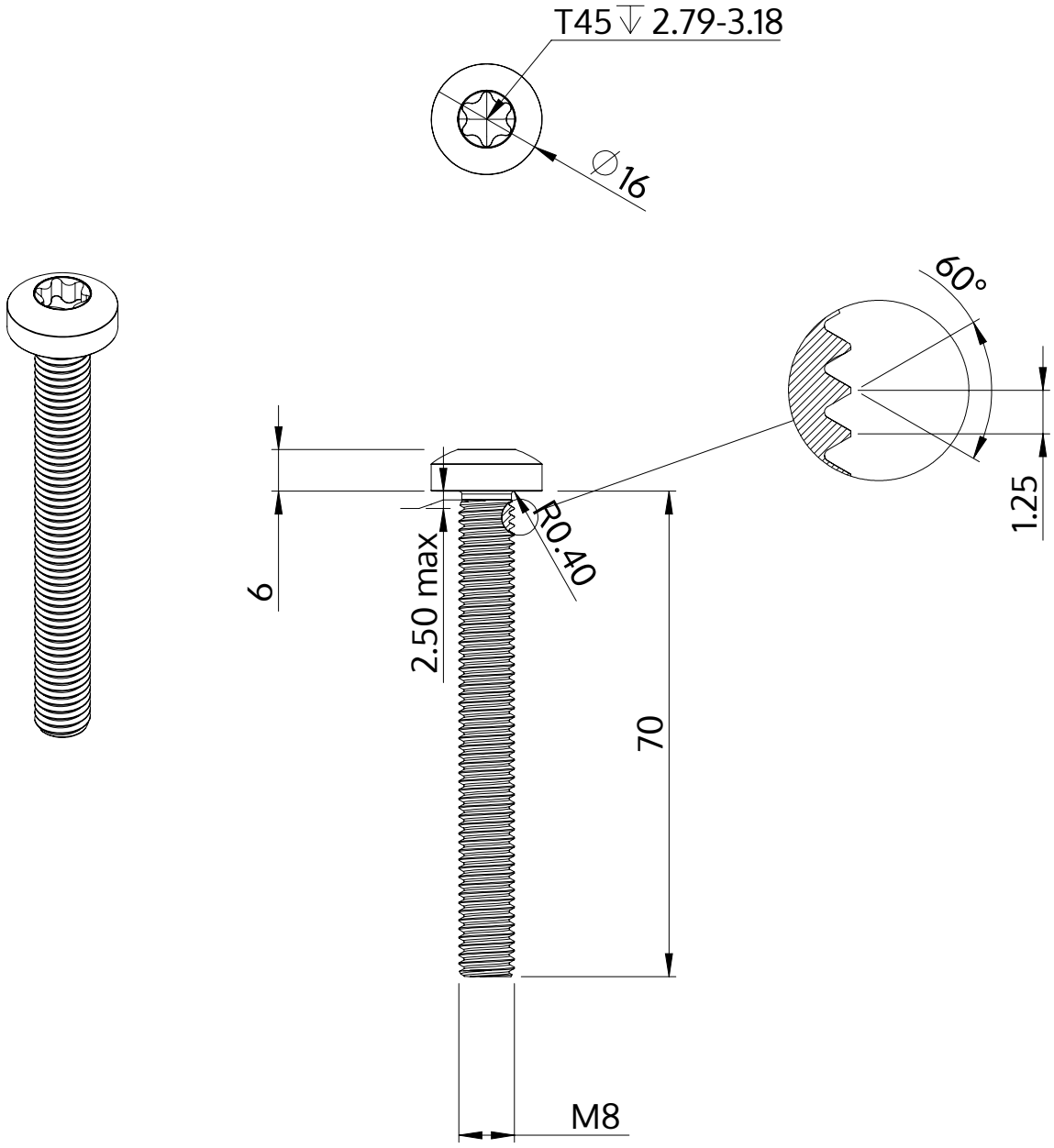

Description	STM39 8.0x70.0 - T45
Material	steel, hardened
Surface	zinc-plated 5-7 µm, baked, blue / transparent passivated
Weight	28.885 kg / 1000 pieces

SCREWERK	**STM390800700S**	
Metric Drawing A4	Scale None:1	2024-04