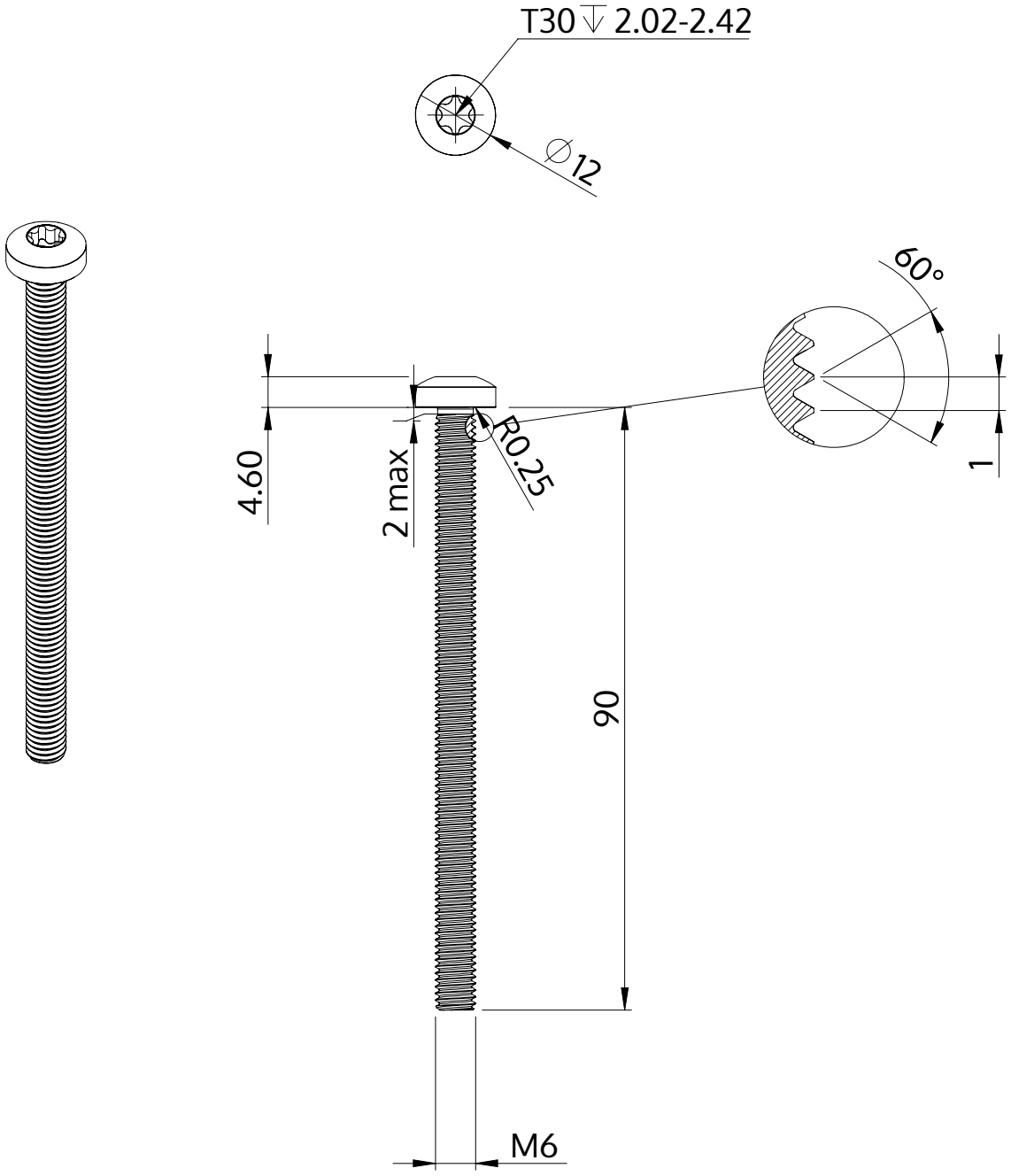

Description	STM39 6.0x90.0 - T30
Material	steel, hardened
Surface	zinc-plated 5-7 µm, baked, blue / transparent passivated
Weight	17.890 kg / 1000 pieces

SCREWERK	**STM390600900S**	
Metric Drawing A4	Scale 1:1	2024-10